Dry screw vacuum pump GXS Series

INSTRUCTION MANUAL

edwardsvacuum.com

M58800880_H

Original instructions

Copyright notice

Associated publications

Publication title	Publication number
Vacuum pump and vacuum system safety-safety manual	P40040100
Pumping flammable gases-applications note	P41100090
SIM protocol-instruction manual	P41100200
MicroTIM-instruction manual	D37360880
GXS 100 centres customer parts manual	M58840845
GXS 150 centres customer parts manual	M59840845
GXS/CXS Installation recommendations	P60102675

Trademark credit

Edwards and the Edwards logo are trademarks of Edwards Limited, Innovation Drive, Burgess Hill, West Sussex RH15 9TW.

Han® is a registered trademark of Harting Electric GmbH

EtherCon® is a registered trademark of Neutrik® AG

Fomblin® is a registered trademark of Solvay Solexis SpA

Krytox® is a registered trademark of DuPont (E.I. du Pont de Nemours and Company)

Loctite® is a registered trademark of Henkel Corporation

Natural Blue® is a registered trademark of Henkel Corporation

Disclaimer

The content of this manual may change from time to time without notice. We accept no liability for any errors that may appear in this manual nor do we make any expressed or implied warranties regarding the content. As far as practical we have ensured that the products have been designed and constructed to be safe and without risks when properly installed and used in accordance with their operating instructions.

We accept no liability for loss of profit, loss of market or any other indirect or consequential loss whatsoever.

Product warranty and limit of liability are dealt with in our standard terms and conditions of sale or negotiated contract under which this document is supplied.

You must use this product as described in this manual. Read the manual before you install, operate, or maintain the product.

P20003980L

CE Declaration of Conformity

Edwards Ltd
Innovation Drive
Burgess Hill
West Sussex
RH15 9TW
UK

The following products

	Low Volt Systems (200-230V)	*High Volt Systems (380-460V)*	*High Volt Systems (380-460V)*
GXS 160	*GS2120yz0000*	*GS2150yz0000*	*9773512590*
GXS 160/1750	*GS5120yz0000*	*GS5150yz0000*	*9773512584*
GXS 250	*GS7120yz0000*	*GS7150yz0000*	*9773512591*
GXS 250/2600 (5.5kW MB)	*GSA120yz0000*	*GSA150yz0000*	
GXS 250/2600 (7.5kW MB)	*GSB120yz0000*	*GSB150yz0000*	*9773512592*
GXS 450	*GSD12xyz0000*	*GSD15xyz0000*	*9773512593*
GXS 450/2600	*GDF12xyz0000*	*GSF15xyz0000*	*9773512594*
GXS 450/4200	*GSG12xyz0000*	*GSG15xyz0000*	*9773512595*
GXS 750	*GSL12xyz0000*	*GSL15xyz0000*	*9773512596*
GXS 750/2600	*GSN12xyz0000*	*GSN15xyz0000*	*9773512597*
GXS 750/4200	*GSP12xyz0000*	*GSP15xyz0000*	*9773512598*

Where
x = 0 or 2 depending on TMS system
y = 0, 1, 3 or 4 depending on gas module type
z = 0, 1, 4 or 5 depending on installation options

Is in conformity with the relevant requirements of European CE legislation:

2006/42/EC	Machinery directive
2014/35/EU	Low voltage directive (LVD) as applicable to electrical sub-assemblies
2014/30/EU	Electromagnetic compatibility (EMC) directive
2006/66/EC	Batteries directive
2011/65/EU	Restriction of certain hazardous substances (RoHS) directive as amended by Delegated Directive (EU) 2015/863

Based on the relevant requirements of harmonised standards:

EN 1012-2:1996 +A1:2009	Compressors and vacuum pumps. Safety requirements. Vacuum pumps
EN 61010-1:2010	Safety requirements for electrical equipment for measurement, control and laboratory use. General requirements
EN 61326-1:2013	Electrical equipment for measurement, control and laboratory use. EMC requirements. General requirements Class A Emissions, Industrial Immunity
Documentation Officer:	Jelena Havelkova, Spielberk Office Centre, Holandska 10, Brno, 63900 Czech Republic, +42(0) 734 418 896, documentation@edwardsvacuum.com

This declaration, based on the requirements of the listed Directives and EN ISO/IEC 17050-1, covers all product serial numbers from this date on: 19th June 2020.

Andries De Bock – Vice President Engineering
Industrial Vacuum Division - Cologne

Nina Buta – General Manager
Lutin, CZ

Additional Legislation and Compliance Information

EU EMC Directive: Class A equipment

Caution: This equipment is not intended for use in residential environments and may not provide adequate protection to radio reception in such environments.

EU RoHS Directive: Material Exemption Information

This product is compliant with the following Annex III Exemptions:

- 6(b) **Lead** as an alloying element in aluminium containing up to 0.4% by weight
- 6(c) Copper alloy containing up to 4% **lead** by weight
- 7(a) **Lead** in in high melting temperature type solder (i.e. lead based alloys containing 85% by weight or more lead)
- 7(c) I Electrical and electronic components containing **lead** in a glass or ceramic other than dielectric ceramic in capacitors, e.g. piezoelectronic devices, or in a glass or ceramic matrix compound
- 7(c) II **Lead** in dielectric ceramic in capacitors for a rated voltage of 125 V AC or 250 V DC or higher
- 8(b) **Cadmium** and its compounds in electrical contacts
- 15 **Lead** in solders to complete a viable electrical connection between semiconductor die and carrier within integrated circuit flip chip packages
- 34 **Lead** in cermet-based trimmer potentiometer elements

EU REACH Regulation Compliance

This product is a complex article which is not designed for intentional substance release. To the best of our knowledge the materials used comply with the requirements of REACH. The product manual provides information and instruction to ensure the safe storage, use, maintenance and disposal of the product including any substance based requirements.

Article 33.1 Declaration:

This product does contain Candidate List Substances of Very High Concern above 0.1%ww by article as clarified under the 2015 European Court of Justice ruling in case C-106/14.

- 1,2-dimethoxyethane (EDGME) added to the Candidate List in June 2012

This substance is sealed within the case of the compact lithium coin cell battery and is essential to the long life and reliable performance of the battery.

- Cadmium (Cd) added to the Candidate List June 2013

As indicated by the applied RoHS exemption above, this substance is present in electronic componentry

- Lead (Pb) added to the Candidate List June 2018

As indicated by the applied RoHS exemption(s) above this substance is present in certain aluminium, brass and electrical or electronic components

Additional Information

The products listed are also in scope for and comply with the requirements of the following:

2012/19/EU	Directive on waste electrical and electronic equipment (WEEE)
Certified to CSA-C22.2 No.61010-1-12	Safety requirements for electrical equipment for measurement, control and laboratory use – Part 1: General requirements
Conforms with UL61010-1 3rd Edition	Safety requirements for electrical equipment for measurement, control and laboratory use – Part 1: General requirements

材料成分声明

China Material Content Declaration

	有害物质 Hazardous Substances					
部件名称 Part name	铅 Lead (Pb)	汞 Mercury (Hg)	镉 Cadmium (Cd)	六价铬 Hexavalent Chromium (Cr VI)	多溴联苯 Polybrominated biphenyls (PBB)	多溴二苯醚 Polybrominated diphenyl ethers (PBDE)
机壳 Enclosure	X	O	O	O	O	O
电机（泵和机械增压泵） Motors (pump and mechanical booster)	X	O	O	O	O	O
泵和增压泵 Pump and booster	X	O	O	O	O	O
电子元件和控件 Electronics and Controls	X	O	X	O	O	O
冷却系统 Cooling system	X	O	O	O	O	O
吹扫系统 Purge system	X	O	O	O	O	O

O: 表示该有害物质在该部件的所有均质材料中的含量低于 GB/T 26572 标准规定的限量要求。
O: Indicates that the hazardous substance contained in all of the homogeneous materials for this part is below the limit requirement in GB/T 26572.

X: 表示该有害物质在该部件的至少一种均质材料中的含量超出 GB/T26572 标准规定的限量要求。
X: Indicates that the hazardous substance contained in at least one of the homogeneous materials used for this part is above the limit requirement of GB/T26572.

This page has been intentionally left blank.

Numbering matrix

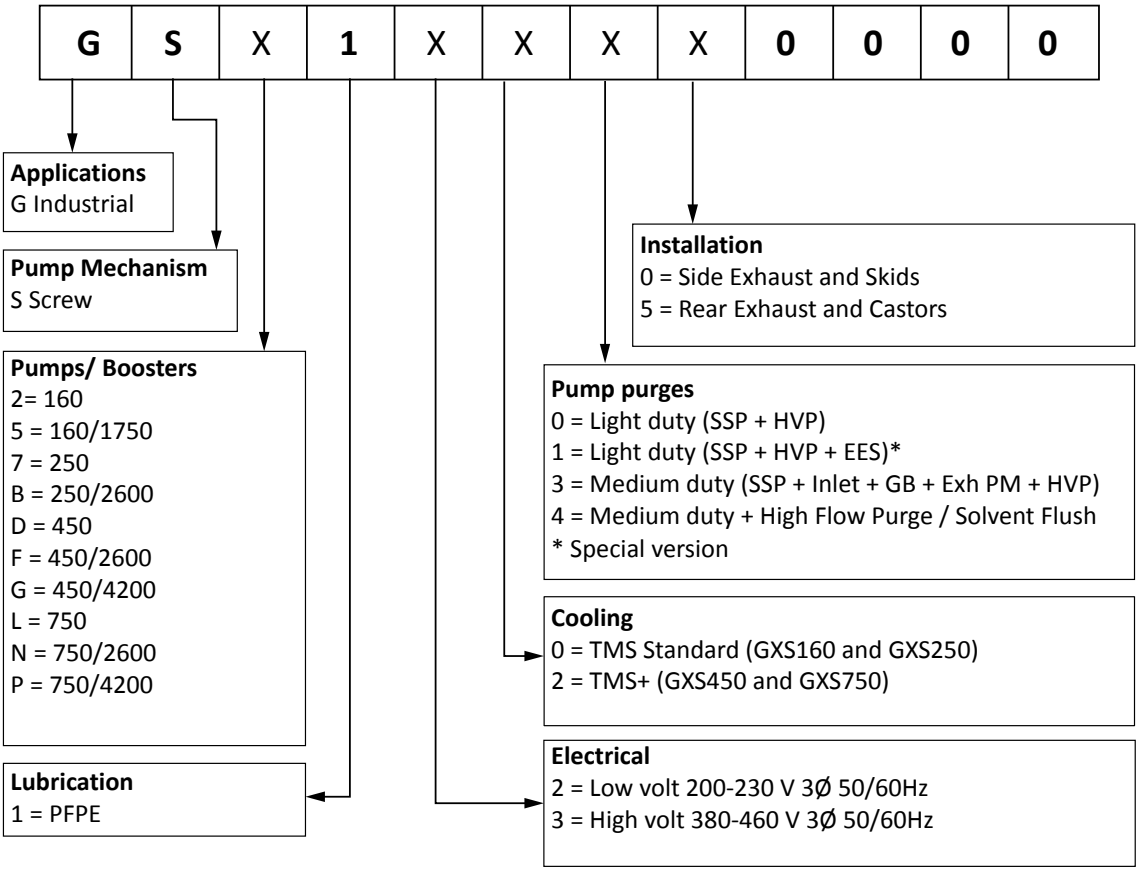

SSP = Shaft seal purge, Inlet = Inlet purge, GB = Gas ballast, Exh PM = Exhaust pressure monitor & purge, HVP = High Vacuum Gearbox Purge, EES = External Evacuation System

Part number	Equivalent part number
9773512595	GSG152350000
9773512592	GSB150350000
9773512598	GSP152350000
9773512594	GSF152350000
9773512590	GS2150350000
9773512584	GS5150350000
9773512593	GSD152350000
9773512596	GSL152350000
9773512591	GS7150350000
9773512597	GSN152350000

Contents

List of Figures

1. Introduction

1.1 Scope and definitions

This manual provides the installation, operation and maintenance instructions for the GXS dry pumping system. The pump must be used as specified in this manual. Read this manual before the installation and operation of the pump.

The units used throughout this manual conform to the SI international system of units of measurement.

The safety Data Sheets for the chemicals supplied by us can be obtained by contacting us, or at *www.edwardsvacuum.com*.

1.2 Applications

The GXS dry pumping systems are suitable for a wide range of industrial applications. We have a dedicated team of applications engineers who can help to determine the best dry pumping system for an application.

Warranties may be invalidated if the dry pumping system is used on an unsuitable application. If in doubt, contact us.

1.3 Description

The dry pumping systems range has been developed to meet the demanding requirements for process pumping solutions in industrial applications. The range sets new standards for harsh process capability, reliability and reduced cost of ownership in low footprint packages.

There are different ways to control the dry pumping system and monitor status. The user can manually press the controls on the front panel and monitor the LEDs on the front and rear of the dry pumping system. The Pump Display Terminal (PDT) gives further functionality for set up and status monitoring. Alternatively the dry pumping system can be controlled using a distributed control system by connecting to the parallel interface by the MCM MicroTIM. There are also several serial interface options, including Ethernet connection.

A high flow purge and solvent flush kit is available as a factory-fit option to clean the pump mechanism on an applications where large quantities of dust and sticky deposits are encountered. The cleaning process is run while the pump is in Green mode/Standby mode and is carried out without the need to remove the pump enclosure. A PDT is required to initiate the cleaning process, it controls a set sequence called DP Clean.

1.4 Priority of control

The dry pumping system can be controlled by a number of modules:

- Front control panel (refer to *Figure: Front panel controls*)
- Pump Display Terminal (PDT)
- Customer's system through the MCM MicroTIM or
- One of the serial interfaces.

Only one of these can have control of the dry pumping system at any one time. That is, once one of these has control of the dry pumping system, the control requests from the others are denied. Control must be released by one module before it can be taken by a different module.

There are LEDs to indicate control:

- The LED on the front control panel illuminates when control is taken by the front panel. Refer to *Figure: Front panel controls*, item 6.
- The LED on the rear of the pump illuminates when control is taken by the MicroTIM. Refer to *Figure: The controls/connectors on the rear of the pump (system with rear exhaust and castors/levelling feet fitted)*, item 9.
- The local control LED on the PDT illuminates when control is taken by that particular PDT. Refer to *Pump display terminal* on page 120.

The PDT display also indicates which system is in control.

1.5 Active utility control/standby

The active utility control (Green mode) function may reduce the speed, power and purge gas consumption of the dry pumping system while on standby. The dry pumping system can be put into Green mode/Standby mode using the front control panel, the PDT or through the MCM MicroTIM. Refer to *Green mode/standby mode* on page 57 for more information.

Figure 1 Front panel controls

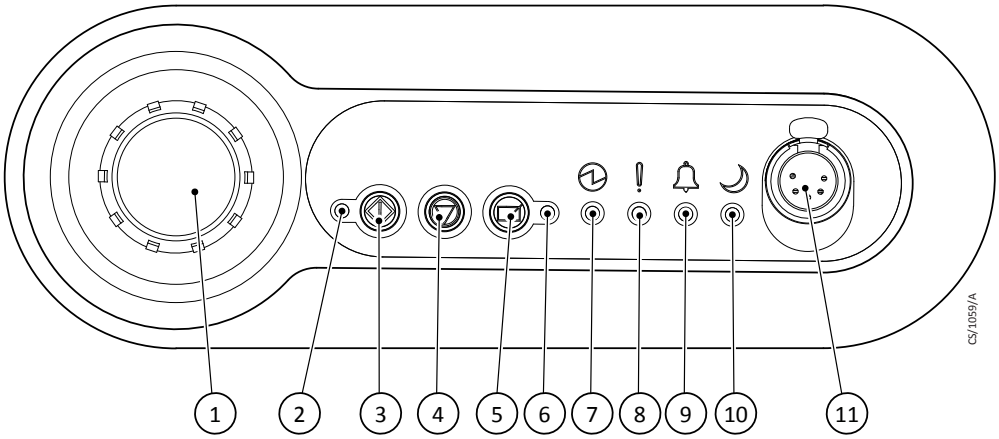

1. EMS button
2. Running LED (green)
3. Start button
4. Stop button
5. Local control button
6. Local control LED (green)
7. Power LED (green)
8. Warning LED (amber)
9. Alarm LED (red)
10. Green mode LED (green)
11. Pump Display Terminal (PDT) connection

Figure 2 Front view of the pumping system with the side exhaust and skids fitted

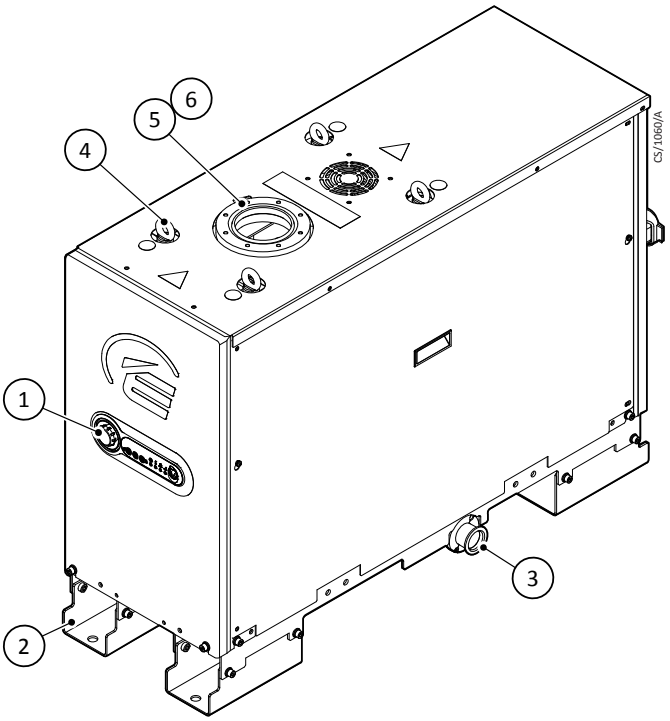

1. Front panel controls
2. Floor mounting plate (4 off)
3. Exhaust gas outlet connection
4. Lifting eyebolts (4 off)
5. Pumped gas inlet connection
6. RF earth (ground) cable

Figure 3 The controls/connectors on the rear of the pump (system with rear exhaust and castors/ levelling feet fitted)

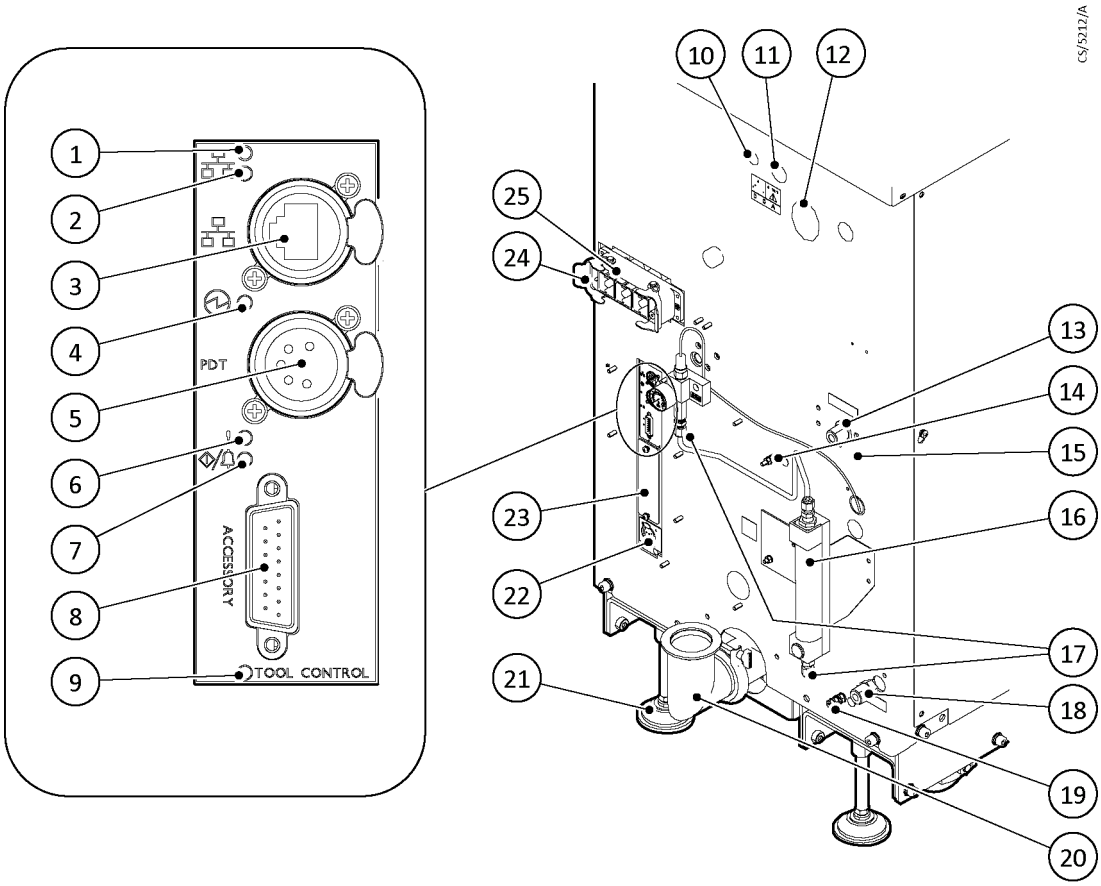

1. Ethernet LAN LED (green)
2. Ethernet link LED (yellow)
3. Ethernet connection
4. Power LED (green)
5. System interface (PDT and serial SIM)
6. Waring LED (yellow)
7. Running and alarm LEDs (2 colours, either green or red)
8. Accessory interface
9. Micro TIM in control LED (green)
10. Pneumatic valve inlet connection (if fitted)
11. DP clean solvent flush fluid connection (if fitted)
12. High flow purge air filter (if fitted)
13. Cooling water in
14. Auxiliary gauge or pressure input connection (if fitted)
15. Protective earth (ground) stud
16. Purge gas rotameter (optional)
17. Purge gas connection
18. Cooling water out
19. RF earth (ground) stud
20. Exhaust gas outlet connection
21. Levelling foot (if fitted)
22. EMS interface
23. Micro TIM connections (if fitted)
24. Electrical supply connector
25. Electrical connector locking mechanism

2. Technical data

2.1 General technical data

Table 1 General technical data

Item	Description	Rating	Units
Operating conditions	Intended use	Indoor	
	Ambient temperature range: Operating Storage	5 to 40 -45 to 55	°C °C
	Maximum relative humidity: Maximum operating altitude Pollution degree	80% for temperatures up to 31 °C decreasing linearly to 50% relative humidity at 40 °C 2000 2 (IEC 61010)	 m
Materials in contact with the process gas	Pump, shaft and rotors	Cast SG iron	
	Seals	PTFE and fluoroelastomer	
	Gas system	Stainless steel, aluminium, brass, PTFE and fluoroelastomer	
Materials in contact with the process gas	Pump, shaft and rotors	Cast SG iron	
	Seals	PTFE and fluoroelastomer	
	Gas system	Stainless steel, aluminium, brass, PTFE and fluoroelastomer	
Degree of protection	Hazardous electrical sub system	IP21D (IEC60529)	
Lubrication	Oil type	PFPE Drynert 25/6 (recommended) Fomblin® 25/6 (alternative) Krytox® 1525 (alternative)	

Table 2 General technical data

Pump	Characteristics								
	Body dimensions length x width x height*	Mass (excluding packaging)	Noise level (at ultimate with a piped exhaust)	Typical vibration level at inlet	Initial force to push the pump†	Sustained force to push the pump†	Pump inlet flange (bolted)	Exhaust gas outlet	Lubricant volume
Units	**mm**	**kg**	**dB(A)**	**mm/s**	**kg force**	**kg force**			**litre**
GXS160	1092 x 390 x 568	305	< 64	< 1.5	< 20	< 10	ISO63‡	NW40	0.7
GXS160/1750	1092 x 390 x 830	475	< 64	< 1.5	< 20	< 10	ISO100	NW40	1.4
GXS250	1092 x 390 x 568	305	< 64	< 1.5	< 20	< 10	ISO63‡	NW40	0.7
GXS250/2600	1092 x 390 x 830	515	< 64	< 1.5	< 20	< 10	ISO160	NW40	1.4
GXS450	1186 x 517 x 717	546	< 64	< 1.5	10	5	ISO100	NW50	1.8
GXS450/2600	1186 x 517 x 1031	760	< 64	< 1.5	16	6	ISO160	NW50	2.4
GXS450/4200	1186 x 517 x 1031	818	< 64	< 1.5	22	< 10	ISO160	NW50	3.3
GXS750	1622 x 517 x 717	679	< 70	< 1.5	15	5	ISO100	NW50‡	2.8
GXS750/2600	1622 x 517 x 1031	918	< 70	< 1.5	22	< 10	ISO160	NW50‡	3.5
GXS750/4200	1622 x 517 x 1031	976	< 70	< 1.5	22	< 10	ISO160	NW50‡	4.3

** Refer to Installation drawings on page 80.*

† For dry pumping systems fitted with optional castors, measured in a laboratory on a level concrete surface.

‡ Refer to Connect the dry pumping system to the vacuum/exhaust system on page 31 for information relating to the exhaust size and length for GX750 dry pumping systems.

‡ For MD+ variants, this flange size is ISO100 to accommodate high flow purge assembly.

2.2 Performance data

Table 3 Performance data

Pump	Characteristics		
	Typical peak pumping speed	Ultimate (shaft seal purge only)	Maximum continuous inlet pressure
Units	m^3/h	mbar	mbar
GXS160	160	$< 1 \times 10^{-2}$	1000
GXS160/1750	1160	$< 1 \times 10^{-3}$	1000
GXS250	250	$< 1 \times 10^{-2}$	1000
GXS250/2600	1900	$< 1 \times 10^{-3}$	1000
GXS450	450	$< 1 \times 10^{-2}$	1000*
GXS450/2600	2200	$< 1 \times 10^{-3}$	1000*
GXS450/4200	3026	$< 1 \times 10^{-3}$	1000*
GXS750	740	$< 1 \times 10^{-2}$	1000*
GXS750/2600	2300	$< 1 \times 10^{-3}$	1000*
GXS750/4200	3450	$< 1 \times 10^{-3}$	1000*

** Speed may be limited.*

2.3 Loading data

Refer to *Installation drawings* on page 80 for the centre of gravity positions for dry pumping systems. The loading data in *Table: Loading data* is for dry pumping systems with an optional levelling feet and castors. Refer to *Figure: Levelling foot loads* for foot positions.

Table 4 Loading data

Pump	Load at levelling foot position (kg)			
	1	2	3	4
GXS160	76	76	76	76
GXS160/1750	127	109	109	127
GXS250	76	76	76	76
GXS250/2600	154	103	103	154
GXS450	131	142	142	131
GXS450/2600	171	209	209	171
GXS450/4200	180	229	229	180
GXS750	160	180	180	160
GXS750/2600	215	244	244	215
GXS750/4200	229	259	259	229

Figure 4 Levelling foot loads

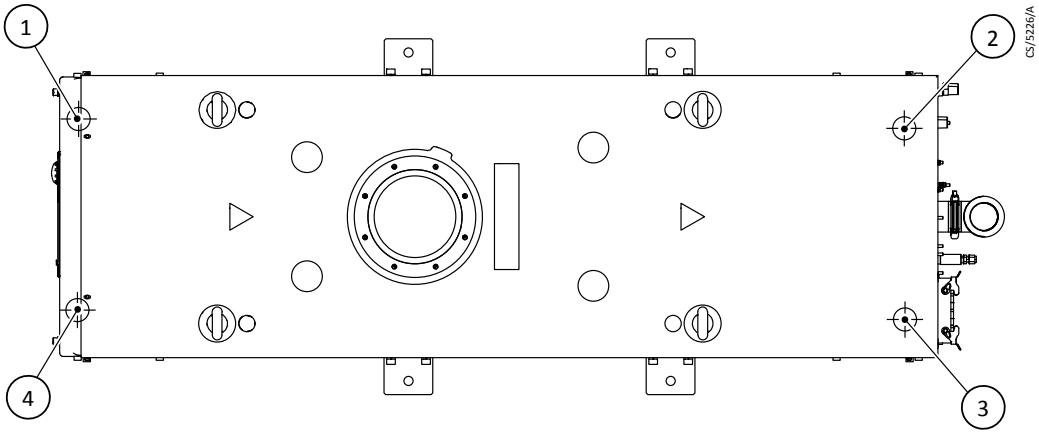

2.4 Purge data

Table 5 Purge data

Characteristics	Rating	Units
Purge gas supply pressure range	2.5 - 6.9	bar gauge
	36 - 100	psi gauge
Purge gas supply quality	ISO 8573 - Class 2	
Purge gas inlet connection	1/4 inch tube fitting	

Table 6 Gas module types and flows

Gas module type	Description	Cycle	Gas flows (slm)					Total flow
			Shaft seal purge	Inlet purge	Manually-adjusted gas ballast	Additional gas ballast*	Exhaust purge	
Light duty (All GXS systems)†	Shaft seal only	Off	0	n/a	n/a	n/a	n/a	0
		Green mode	12	n/a	n/a	n/a	n/a	12
		On process	12	n/a	n/a	n/a	n/a	12
		Shut down	12	n/a	n/a	n/a	n/a	12
Medium duty (GXS160 and GXS250 systems)†	Electronically controlled gas ballast purge (with manually adjusted flow) + inlet purge + exhaust purge	Off	0	0	0	n/a	0	0
		Green mode	12	0	0	n/a	6	18
		On process	12	0	0-34	n/a	6	18-52
		Shut down	12	16	0	n/a	6	34
Medium duty (GXS450 and GXS750 systems)†	Gas ballast purge (with manually adjusted flow) + inlet purge + exhaust purge + option of an additional electronically controlled gas ballast*	Off	0	0	0	0	0	0
		Green mode	12	0	0-64	0	6	18-82
		On process	12	0	0-64	0 (default) 64 (enabled)	6	18-146
		Shut down	12	26	0-64	0	6	44-108

** By default the dry pumping system is supplied with the additional gas ballast which is switched off. This additional gas ballast can be enabled in software using an optional PDT.*

† The dry pumping systems in a standard configuration must run with a seal purge. If the application requires removal of a seal purge, consult our application specialist.

2.5 Electrical data

Table 7 Electrical data

Characteristics	GXS160	GXS160/1750	GXS250	GXS250/2600	GXS450	Units
Dry pump motor rating	7.5	7.5	7.5	7.5	11	kW
Mechanical booster motor rating	-	4.5	-	7.5	-	kW
Current rating (200 - 230 V systems)	25	31	31	38	49	A
Current rating (380 - 460 V systems)	11	14	14	20	26	A
Recommended branch circuit protection UL (200 - 230 V systems)	30	40	40	50	60	A
Recommended branch circuit protection IEC (200 - 230 V systems)	25	35	35	35	50	A
Recommended branch circuit protection UL (380 - 460 V systems)	15	20	20	25	30	A
Recommended branch circuit protection IEC (380 - 460 V systems)	15	15	15	20	30	A
Min cable size for 200 - 230 V systems (or corresponding AWG size)	6 (8)*	6 (8)*	6 (8)*	10 (8)	10 (6)	mm^2 (AWG)
Min cable size for 380 - 460 V systems (or corresponding AWG size)	6 (8)*	6 (8)*	6 (8)*	6 (8)*	6 (8)*	mm^2 (AWG)
Mains connector for 200 - 230 V systems	Han® K 4/4	Han® K 4/4	Han® K 4/4	Han® K 4/4	Han® K 4/4	-
Mains connector for 380 - 460 V systems	Han® K 4/4	Han® K 4/4	Han® K 4/4	Han® K 4/4	Han® K 4/4	-

Characteristics	GXS450/ 2600	GXS450/ 4200	GXS750	GXS750/ 2600	GXS750/ 4200	Units
Dry pump motor rating	11	11	22	22	22	kW
Mechanical booster motor rating	7.5	7.5	-	7.5	7.5	kW
Current rating (200 - 230 V systems)	65	65	120	140	135	A
Current rating (380 - 460 V systems)	34	34	60	78	74	A
Recommended branch circuit protection UL (200 - 230 V systems)	80	80	150	170	160	A
Recommended branch circuit protection IEC (200 - 230 V systems)	65	65	120	140	135	A
Recommended branch circuit protection UL (380 - 460 V systems)	40	40	75	95	90	A
Recommended branch circuit protection IEC (380 - 460 V systems)	35	35	63	80	75	A
Min cable size for 200 - 230 V systems (or corresponding AWG size)	16 (4)	16 (4)	35 (2)	50 (1/0)	50 (1/0)	mm^2 (AWG)
Min cable size for 380 - 460 V systems (or corresponding AWG size)	10 (6)†	10 (6)†	16 (4)	25 (4)	25 (4)	mm^2 (AWG)
Mains connector for 200 - 230 V systems	Han® 100 A module	Han® 100 A module	Han® 200 A module	Han® 200 A module	Han® 200 A module	-
Mains connector for 380 - 460 V systems	Han® 100 A module	Han® 100 A module	Han® 100 A module	Han® 100 A module	Han® 100 A module	-

** The minimum geometric wire gauge for Han® K 4/4 is 6 mm^2 and minimum AWG size is 8 AWG.*

† The minimum geometric wire gauge for Han® 100A module is 10 mm^2 and minimum AWG size is 6 AWG.

Table 8 General electrical data

Description	Rating	Units
Supply voltage 3-phase	Either 200 - 230 or 380 - 460 (see rating plate)	V a.c.
Frequency	50/60	Hz
Wiring configuration	3 wire plus Earth (ground)	
Voltage tolerance range	± 10%	
Installation category	II (IEC 60664-1)	
Input supply voltage unbalance	Should not exceed 2% when assessed over any one minute period	
Short circuit current rating (when installed with class T or class J fuses)	200	kA
Second protective earth (ground) conductor	Must be fitted with cross-sectional area at least equal to phase conductor size	
Maximum permitted overcurrent protection for systems with the Han® K 4/4 mains connector*		
For 200 - 230 V systems For 380 - 460 V systems	60 35	A A
Typical earth leakage†		
For 200 - 230 V systems		
For GXS750/2600 and GXS750/4200 For all other GXS systems	9 <5	mA mA
For 380 - 460 V systems:		
For GXS750/2600 and GXS750/4200 For all other GXS systems	18 <10	mA mA

** If the overcurrent protection is used above the ratings in Table: Electrical data for the systems with the Han®K 4/4, the minimum cable sizes no longer apply and you must ensure that the pump cable size is appropriately rated and in accordance with local legislation and electrical regulations. Ensure that the cable size is compatible with the mains connector. Refer to Table: Electrical connections.*

†Typical earth leakage values were measured at steady-state conditions.

Note that higher leakage currents may occur:

i) under transient conditions such as power on or pump acceleration

ii) with the abnormal supply configurations such as a missing or earthed phase or unbalanced supply voltages.

Contact us for more information about the configuration requirements for earth leakage reduction.

Recommended fuse type:

Fuse Class gG (IEC 60269), UL class T, class J or class RK5, Bussmann type JJS or equivalent 12t characteristic rated to 600 V.

Table 9 Electrical connections

Description	Mating connector description/external supply rating	Internal supply rating
Mains connection	Refer to *Table: Electrical data* for the mains connector fitted to each variant. Connector is either: Harting Han® K4/4-F finger safe 09 38 008 2703, 6-16 mm^2 fine stranded wire (VDE 0295 class 5, refer to *Table: Wire assembly according to VDE 0295*), 8.9 mm maximum insulation diameter or Harting Han® Axial Screw module 100 A (2 off required), part number of mating half suitable for 10-25 mm^2 wire is 0914 002 2753 or 0914 002 2751 for 16-35 mm^2 wire. Use fine stranded wire (VDE 0295 class 5, refer to *Table: Wire assembly according to VDE 0295*). or Harting Han® Axial Screw module 200 A (3 off required), part number of mating half suitable for 25-40 mm^2 wire is 0914 001 2763 or 0914 001 2762 for 40-70 mm^2 wire. Use fine stranded wire (VDE 0295 class 5, refer to *Table: Wire assembly according to VDE 0295*).	
Refer to *Installation* on page 28 for the wiring diagram		
PDT interface	XLR type 5-way plug	24 V d.c. 0.2 A
Pin 1 Pin 2 Pin 3 Pin 4 Pin 5		0 V 24 V Transmit data Receive data Not used
System interface	XLR type 5-way plug	24 V d.c. 0.75 A*
Pin 1 Pin 2 Pin 3 Pin 4 Pin 5		0 V 24 V Transmit data Receive data Not used
Ethernet interface	Standard RJ45 type or Neutrik® EtherCon® RJ45	(IEEE802.3i 10 Base T Ethernet)
EMS interface	XLR type 6-way plug	
External emergency stop switch Pin 1 - supply, Pin 2 - return**		24 V d.c. 100 mA

Description	Mating connector description/external supply rating	Internal supply rating
Internal emergency stop switch Pin 3 - common, Pin 4 - normally open	30 V a.c. 1 A, 60 V d.c. 0.55 A	
Comms 24 V supply Pin 5 - supply, Pin 6 - 0 V supply common Chassis		24 V d.c. 0.75 A*
Accessory interface	15-way D socket	
Analogue measurement for water flow sensor Pin 1 - input, Pin 5 common Active accessory module Pin 3 - RS485 +, Pin 10 - RS485 - Pump running status contacts Pin 6 -Dry pump (normally open) Pin 14 - Mechanical booster (normally open) Pin 15 - common Inlet isolation valve Pin 4 - Inlet isolation valve drive transistor (open collector) Inlet isolation valve position sense Pin 7 - 'Closed', Pin 8 - 'Open'	30 V a.c. 1 A, 60 V d.c., 0.5 A	
Power Supplies Pin 12 - Accessory 24 V supply		24 V d.c. 0.75 A*
Pin 13 - Accessory 24 V supply†		24 V d.c. 0.2 A
Pin 5 - 0 V supply common		

** The system interface, the EMS interface and the accessory interface have a combined current rating of 0.75 A.*

† This supply will be disconnected in the event of an emergency stop.

*** If there is no external connection, a link plug must be fitted to operate the pump.*

Table 10 Wire assembly according to VDE 0295

Wire size (mm²)	Fine stranded wires VDE 0295 class 5
6	84 x 0.30
10	80 x 0.40
16	128 x 0.40
25	200 x 0.40
35	280 x 0.40
50	400 x 0.40

2.6 Cooling-water data

Table 11 Water cooling system data

Description	Rating	Units
Maximum supply pressure	6.9	barg
	100	psig
Maximum allowable system differential pressure	5.5	bar
Minimum required pressure differential across supply and return	Refer to *Table: Water consumption data (GXS160/250/1750/2600)* to *Table: Water consumption data (GXS750/2600/4200)*	bar
Supply temperature range	5 - 40*	°C
Water type	Treated or non-corrosive industrial	
Maximum particle size	0.2	mm^2
Acidity	7.0 to 10.5	pH
Hardness	<250	ppm of $CaCO_3$ (<250 mg of $CaCO_3$ per litre)
Total Dissolved Solids (TDS)	<1500	mg/l
Total Suspended Solids (TSS)	<10	mg/l
Specific conductivity	2000	µS/cm
Materials in contact with the cooling water	Stainless steel, Nitrile, PTFE, brass, polyamide and fluoroelastomer	
Water inlet connection	3/8 inch BSP male (GXS160/250) 1/2 inch BSP male (GSXS450/750/2600/4200)	
Water outlet connection	3/8 inch BSP male (GXS160/250) 1/2 inch BSP male (GSXS450/750/2600/4200)	

** Maximum coolant temperatures may need to be reduced if Glycol or other coolants are used dependent on the dilution and type.*

Table 12 Water consumption data (GXS160/250/1750/2600)

Pump	Minimum flow rate required *	Minimum required pressure differential across supply and return†
	l/min	bar
GXS160	4	1
GXS160/1750	7	1
GXS250	4	1

Pump	Minimum flow rate required *	Minimum required pressure differential across supply and return†
	l/min	bar
GXS250/2600	7	1

** All GXS dry pumping systems have a valve cooling system which will cause the coolant flow rate to vary in response to pump load conditions. Table: Water consumption data (GXS160/250/1750/2600) states that the "minimum flow rate required" under worst-case pump load conditions when all valves are open. Flow rates need to be increased and/or coolant temperatures reduced if Glycol or other coolants are used dependent on the dilution type.*

† The differential pressure values given are the minimum differential pressures required across the water supply/return at the point of connection to the pump to achieve the desired flow when the solenoid valves are open.

Table 13 Water consumption data (GXS450 only)

Ambient (°C)	Water Temperature (°C)		
	40	30	20
40	15 SLM 1.8 bar dP	12 SLM 1.5 bar dP	10 SLM 1 bar dP
30	12 SLM 1.5 bar dP	12 SLM 1.5 bar dP	10 SLM 1 bar dP
20	10 SLM 1 bar dP	10 SLM 1 bar dP	10 SLM 1 bar dP

Table 14 Water consumption data (GXS450/2600/4200)

Ambient (°C)	Water Temperature (°C)		
	40	30	20
40	19 SLM 2 bar dP	16 SLM 1.5 bar dP	12 SLM 1 bar dP
30	16 SLM 1.5 bar dP	16 SLM 1.5 bar dP	12 SLM 1 bar dP
20	12 SLM 1 bar dP	12 SLM 1 bar dP	12 SLM 1 bar dP

Table 15 Water consumption data (GXS750 only)

Ambient (°C)	Water Temperature (°C)		
	40	30	20
40	19 SLM 2 bar dP	15 SLM 1.2 bar dP	12 SLM 1 bar dP
30	15 SLM 1.2 bar dP	15 SLM 1.2 bar dP	12 SLM 1 bar dP
20	12 SLM 1 bar dP	12 SLM 1 bar dP	12 SLM 1 bar dP

Table 16 Water consumption data (GXS750/2600/4200)

Ambient (°C)	Water Temperature (°C)		
	40	30	20
40	25 SLM 2 bar dP	20 SLM 1.3 bar dP	15 SLM 0.75 bar dP
30	20 SLM 1.3 bar dP	20 SLM 1.3 bar dP	15 SLM 0.75 bar dP
20	15 SLM 0.75 bar dP	15 SLM 0.75 bar dP	15 SLM 0.75 bar dP

2.7 DP clean high flow purge/solvent flush option

Table 17 High flow purge/solvent flush data

Feature	Specification	Rating
Pneumatic valve gas supply	Nitrogen or clean dry air	2.5 - 6.9 barg (36 - 100 psig)
Pneumatic valve inlet connection	3/8 inch compression fitting	
High flow purge gas	Air, nitrogen or other inert gas which is compatible with process	Typically 170 slm (for the GXS160 and GXS250 systems) and 185 slm (for the GXS450 and GXS750 systems) at atmospheric pressure at the purge inlet connection
High flow purge air filter	1/2 inch NPT male (available as a spare, refer to *Spares* on page 79)	
DP clean solvent flush fluid inlet connection	3/8 inch BSP male	
DP clean solvent suction pipe connection	3/8 inch BSP female	

Notes:

1. The high flow purge/solvent flush kit is available as an option.

2. The DP clean solvent suction pipe is supplied with the pump but not fitted.

2.8 External evacuation system

The pumpdown performance on dry pumping systems fitted with mechanical boosters can be further enhanced by the use of an External Evacuation System (EES) kit. The EES kit will only provide performance improvement on pumpdown cycles lasting less than 30 seconds to pressures below 0.1 mbar. The EES kit must only be used on clean applications.

3. Installation

WARNING:

Obey the safety instructions in this section and take note of appropriate precautions. Failure to do so may result in injury to people and damage to equipment.

WARNING:

The dry pumping system should not be operated with the enclosure panels removed.

WARNING:

The dry pumping system contains electrolytic capacitors which may emit dangerous fumes under certain fault conditions. Ensure the dry pumping system is installed in a well-ventilated area.

WARNING:

Do not expose any part of the human body to vacuum as it can cause injury.

Potential hazards on the dry pumping system include electricity, hot surfaces, process chemicals, lubricating oil, purge gas and water under pressure.

Detailed safety information is given in *Operation* on page 54 and our safety manual publication number P40040100 Vacuum Pump and Vacuum Systems.

- A suitably trained and supervised technician must install the dry pumping system. Users can be trained by us to conduct the tasks described in this manual, contact your local service centre or Edwards for more information.
- Do not remove the temporary cover or blanking plate from the dry pumping system inlet and exhaust until ready to connect the dry pumping system to the vacuum or exhaust extraction system. Do not operate the dry pumping system unless the inlet and exhaust are connected to the vacuum and exhaust extraction system.
- Vent and purge the process system (if the dry pumping system is to replace an existing pumping system) for 15 minutes before starting installation work. Refer to *Maintenance* on page 67.
- Disconnect the other components in the process system from the electrical supply so that they cannot be operated accidentally.
- Electrical, purge gas and water supplies are all potentially hazardous energy sources. Before carrying out any maintenance the supply of these sources should be locked and tagged out.
- Any unintended overflows or spills of oil or water must be removed immediately to avoid the risk of slips.
- Obey all national and local rules and safety regulations when installing the dry pumping system. Consult our safety manual publication number P40040100

Vacuum Pump and Vacuum Systems before pumping hazardous materials. This publication is available on request: contact us or the supplier.

- Route and secure cables, hoses and pipework during installation to avoid the possible risk of trips.
- Before locating the dry pumping system, ensure that the installation area is clean and free from debris and contamination (such as oil).

In order for the dry pumping system to perform to specification, appropriate facilities must be provided as detailed in this manual.

Before installing, we recommend that you read the publication P60102675 Installation recommendations for the GXS and CXS pumps.

3.1 Locate the dry pumping system

WARNING:

Suitable lifting equipment must be used to move the dry pumping system. It is too heavy to lift by hand.

Move the dry pumping system to its operating position using any of the following methods:

- Use a forklift or pallet truck to lift the dry pumping system.

WARNING:

Do not exceed the topple angle when moving the dry pumping system. When using a forklift or pallet truck, adjust the forks to lift around the centre of gravity.

CAUTION:

When using a forklift or pallet truck to lift the dry pumping system, make sure to insert the forks under the base rail on the side of the dry pumping system otherwise the exhaust may be damaged. The base rail has cut-outs for forklift access.

Refer to the installation drawings in *Installation drawings* on page 80 for the topple angle and centre of gravity information.

- Lift the dry pumping system by the eyebolts.

WARNING:

Ensure that the maximum angle between the paired slings used to lift the dry pumping system is 45°.

Each dry pumping system is provided with four lifting eyebolts to enable lifting. Refer to *Figure: Front view of the pumping system with the side exhaust and skids fitted*, item 4.

Ensure that all the lifting eyebolts are used when lifting the dry pumping system. Once the dry pumping system has been moved to its location, remove the lifting eyebolts and replace with the lifting eyebolt covers supplied with the dry pumping system.

3.1.1 Dry pumping systems with optional castors

WARNING:

Dry pumping systems fitted with castors should only be wheeled short distances over flat surfaces. If the floor surface is uneven or has obstacles, the dry pumping system should be lifted with suitable lifting equipment.

Dry pumping systems are supplied with an option of skids or castors. For dry pumping systems fitted with castors, it is important to note that the castors are intended only to aid the manoeuvre of the dry pumping system into its final operating position. Dry pumping systems should be moved near to their final operating positions using either a forklift or pallet truck or lifted via the eyebolts as described above.

The force required to push a dry pumping system on its castors varies greatly depending on the surface finish, cleanliness of the floor and any slopes or inclines. The forces quoted in *General technical data* on page 15 were measured on a flat and level concrete floor and are not necessarily representative of all industrial locations.

It is the user's responsibility to carry out a risk assessment of their location and take appropriate measures to ensure that the dry pumping system is manoeuvred safely and in accordance with local and national manual handling guidelines.

3.1.2 Levelling the pump

The dry pumping system must be located on a firm, non-combustible, level surface, capable of supporting the pump mass, to ensure that it works correctly and is not damaged. The pump must be level to a maximum of 3 degrees in any direction, measured at the pump inlet. It can be located directly on the floor or a frame. Ensure that access is possible to the emergency stop button (refer to *Figure: Front panel controls*, item 1). Guidance for the access areas (general and service) is given in the installation drawings.

- Pumps with skids are provided with four floor mounting plates, refer to *Figure: Front view of the pumping system with the side exhaust and skids fitted*, item 2. If necessary, fit shims (which must be supplied) to ensure that the dry pumping system is level.
- Pumps with castors are provided with the four levelling feet, refer to *Figure: The controls/connectors on the rear of the pump (system with rear exhaust and castors/levelling feet fitted)*, item 21. Once the dry pumping system has been pushed into the position, adjust the levelling feet to make sure that the dry pumping system is level and is not supported by the castors. Refer to the installation drawings in *Installation drawings* on page 80 for the suggested jacking height.

3.1.3 Securing the pump

To secure the pump in place to prevent inadvertent movement (for example, during an earthquake), take note of the following:

- Dry pumping systems with castors are supplied with four off seismic restraints as detailed in the installation drawings.

- Dry pumping systems with skids are provided with four off mounting holes in the floor mounting plates as detailed in the installation drawings.
- All dry pumping systems can be secured by fitting the bolts or studs (not supplied) through the mounting holes in either the mounting plates or seismic restraints. Use M16 (5/8 inch) bolts with shakeproof washers or other suitable anchor bolts of the same size.
- Ensure that the bolt size and spacing is adequate for the loads anticipated and the strength of the floor or frame.
- To locate the pump directly on the floor, use a concrete foundation with a mass of at least 1.5 times the mass of the pump. Ensure that the length and width of the foundation extend at least 100 mm (4 inches) beyond the dimensions of the pump.
- If vibration transmission is a concern, vibration isolators (not supplied) should be fitted between the mounting plates or seismic restraints and the bolt or stud.

3.2 Lubrication

The dry pumping systems are given a charge of oil before leaving the factory.

3.3 Connect the dry pumping system to the vacuum/exhaust system

WARNING:

Pipe the exhaust to a suitable treatment plant to prevent the discharge of dangerous gases or vapours to the surrounding atmosphere.

WARNING:

Do not operate the dry pumping system with the exhaust pipeline blocked. If the exhaust pipeline is blocked, the dry pumping system can generate exhaust pipeline pressures of up to 10 bar (10 x 10^5 Pa). Note that a pressure spike up to a maximum 15 bar (15 x 10^5 Pa) can be generated in the exhaust pipeline for less than 0.5 seconds if the inlet is instantaneously exposed to atmospheric pressure when the pump is running and the exhaust is blocked.

WARNING:

Do not touch the pump exhaust and check-valve (if fitted) while the pump is running since the temperatures of these parts cause burns. These parts will remain hot after the pump has stopped.

CAUTION:

The dry pumping systems have a maximum continuous exhaust line pressure limit. Operation above the limit may damage the pumping mechanism.

The medium duty dry pumping systems have an exhaust pressure sensor which will initiate warnings and alarms when the pump is operated for at least 20 seconds above the limits given in *Table: Pump protection sensors*. The pump will continue to run with a warning present, however an alarm will cause the pump to stop.

The light duty dry pumping systems do not have an exhaust pressure sensor. The maximum continuous exhaust line pressure of these dry pumping systems should not exceed 0.4 barg.

For all pumps, it is the user's responsibility to provide an exhaust system with sufficient conductance to ensure the exhaust pressure limit is not normally exceeded.

CAUTION:

Use a catchpot to prevent the drainage of condensate back into the dry pumping system. Condensate that drains back into the dry pumping system could damage the pump.

Do not reuse any O-ring or O-ring assembly and do not allow debris to get into the dry pumping system during installation.

When connecting the dry pumping system to the vacuum system, take note of the following:

- To get the best pumping speed, ensure that the pipeline which connects the vacuum system to the dry pumping system is the minimum length possible and has an internal diameter not less than the system inlet port.
- Ensure that all components in the vacuum pipeline have a maximum pressure rating which is greater than the highest pressure that can be generated in the dry pumping system.
- Incorporate flexible pipelines in the vacuum pipeline to reduce the transmission of vibration and to prevent the loading of coupling joints. We recommend using our braided flexible pipelines. The pipelines should be rated for 110 °C.
- Adequately support vacuum/exhaust pipelines to prevent the transmission of stress to pipeline coupling joints.
- Incorporate a pressure gauge in the inlet pipeline to determine that the dry pumping system operates correctly.
- The dry pumping system inlet must be able to be isolated from the atmosphere and the vacuum system if pumping or producing corrosive chemicals.
- The outlet of the exhaust pipe can have a check valve fitted which prevents the suck-back of exhaust vapours after the dry pumping system is shut down. The check valve also provides additional attenuation of the pulses in exhaust pressure.
- For all GXS750 dry pumping systems, there is a limit to the length of NW50 pipeline that can be used between the pump exhaust connection and the facility exhaust. For GXS750 dry pumping systems with a check valve, the length of the pipeline is limited to 1 metre. For GXS750 dry pumping systems without a check valve, the length is limited to 3 metres. If these lengths are exceeded, GXS750 pump will trip out due to high exhaust pressure. If the distance to the facility exhaust is greater

than these limits, consider using an adaptor on the pump exhaust and a larger diameter pipeline.

- For pumps running on dusty processes, we recommend that the exhaust line is cleaned regularly as part of routine maintenance. Accumulation of dust in the exhaust line can reduce conductance and therefore increase exhaust pressure which may damage the pump. The frequency of exhaust line cleaning depends on the process. On very dusty applications, use a low-impedance inlet filter to reduce maintenance requirements.

1. Referring to *Figure: Connecting the pump inlet*, remove the temporary cover or blanking plate from the inlet of the dry pumping system. Take care not to drop screws, tools and so forth into the pump inlet. Retain the nuts, bolts, washers and blanking plate for future use. Retain the temporary cover for future use on non-contaminated pumps only. The inlet O-ring is supplied with the pump, it is fitted underneath the inlet flange cover.
2. Use the O-ring supplied and suitable nuts, bolts and washers (not supplied) to connect the inlet flange (*Figure: Front view of the pumping system with the side exhaust and skids fitted*, item 5) to the vacuum system. The inlet flange is not designed for use with a trapped O-ring or centring ring. Use our half claw clamps when connecting an ISO style foreline flange to the dry pumping system inlet. Refer to *Figure: Connecting the pump inlet*.
3. Use the trapped O-ring and clamp supplied to connect the exhaust outlet (*Figure: Front view of the pumping system with the side exhaust and skids fitted*, item 3 or *Figure: The controls/connectors on the rear of the pump (system with rear exhaust and castors/levelling feet fitted)* item 20) to the exhaust extraction system.

Figure 5 Connecting the pump inlet

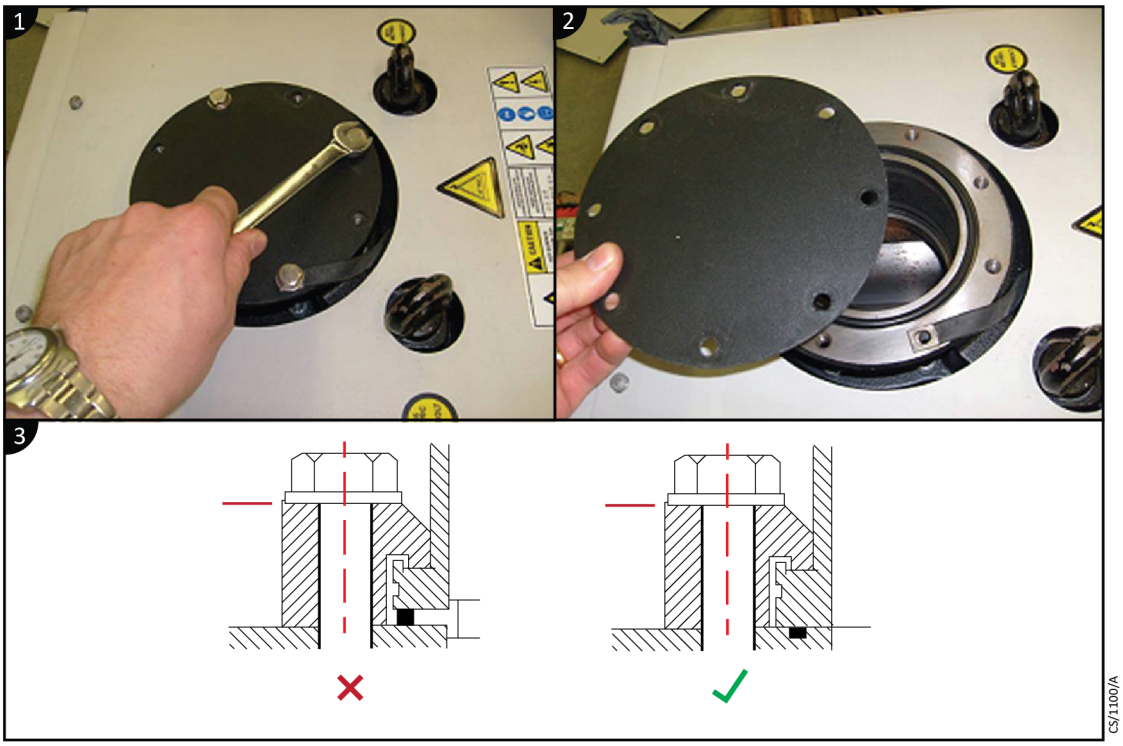

1. Undo the screws
2. Remove cover
3. Do not use trapped O-ring or centering ring

Flange diameter	Half claw clamp part number	Quantity required	Tightening torque (Nm)
ISO63	C10007093	4	5
ISO100	C10007093	8	5
ISO160	C10011093	8	5
ISO200	C10011093	12	5
ISO250	C10011093	12	5

3.4 Connect the purge gas supply

WARNING:

A release of nitrogen has potential to cause harm by asphyxiation. The nitrogen supply should enable isolation for lockout/tagout purposes.

CAUTION:

Ensure that the purge gas supply conforms to the requirements given in the *Technical data* on page 15. Failure to do so may cause the gas pipelines to become blocked or the dry pumping system to be damaged.

Refer to *Figure: The controls/connectors on the rear of the pump (system with rear exhaust and castors/levelling feet fitted)*, item 18 for location of the purge gas

connection (at the standard pressure switch or the option flow meter). Nitrogen and clean dry air are suitable purge gases for the dry pumping systems. To use a different purge gas, please contact us.

Check visually that the dial pressure gauge and rotameter (if installed) is not damaged when installing the dry pumping system.

Note:

Refer to Purge data on page 18 for the purge gas supply requirements.

3.4.1 Flammable/pyrophoric materials

WARNING:

Obey the instructions and take note of any precautions given below to ensure that pumped gases do not enter their flammable ranges.

When flammable or pyrophoric materials are present within the pump there may be additional risks that the user is responsible for assessing and managing as part of the entire process system installation. The severity of the risks and the necessary control measures will depend largely on whether the process system exhaust is in the flammable region, if this is part of normal operation, or if it might only occur under rare conditions. The additional risks arise because all dry pumps must be considered as potential source of ignition due to the heat of compression, or possibly friction. If ignition occurs then the following may happen:

- High pressures could occur within the pump and may not be contained.
- A flame front could travel back up the foreline.
- A flame front could travel downstream from the exhaust of the pump.

Industry best practice suggests that the following measures will reduce the risks of pumping flammable mixtures and pyrophoric materials, but it is the responsibility of the user to carry out a risk assessment and take appropriate measures:

- Do not allow air to enter the equipment.
- Ensure that the dry pumping system is leak-tight.
- Ensure that gases in the pump do not enter the flammable range. This may be achieved by diluting gases in the pump by supplying sufficient inert gas purge. For example, dilution with nitrogen to below one quarter Lower Explosive Limit (LEL) or, if that is not practical, to below 60% Limiting Oxidant Concentration (LOC).
- The gas module supplied with the pump is not intended to perform a safety function. Users may need to consider adding appropriate measures to monitor the flow of purge gas (for example, external sensors). The dry pumping systems that are fitted with light-duty gas module must not be used on applications pumping flammable or pyrophoric materials.

For further information please refer to publication number P40040100, applications note 'Pumping Flammable Gases' P4100090 or contact us.

3.4.2 Gas purges

WARNING:

If inert gas purges to dilute dangerous gases to a safe level are to be used, ensure that the pump is shut down if inert gas supply fails.

Switch on the inert gas purge to remove air from the pump and the exhaust pipeline before the process starts. Switch off the purge flow at the end of the process only after the remaining flammable gases or vapours have been purged from the exhaust pipeline.

If liquids that produce flammable vapours could be present in the pump foreline, then the inert gas purge to the dry pumping system should be left on all the time this liquid is present. Flammable liquids could be present in the foreline as a result of condensation or may be carried over from the process.

When calculating the flow rate of inert gas required for dilution, consider the maximum flow rate for the flammable gases/vapours that could occur. For example, if a mass flow controller is being used to supply flammable gases to the process, assume a flow rate for flammable gases that could arise if the mass flow controller is fully open.

Continually measure the inert gas flow rate. If the flow rate falls below that required, then the flow of flammable gases or vapours to the pump must be stopped.

3.5 Leak test the dry pumping system

Figure 6 Interspool connections on the pump/booster combination systems

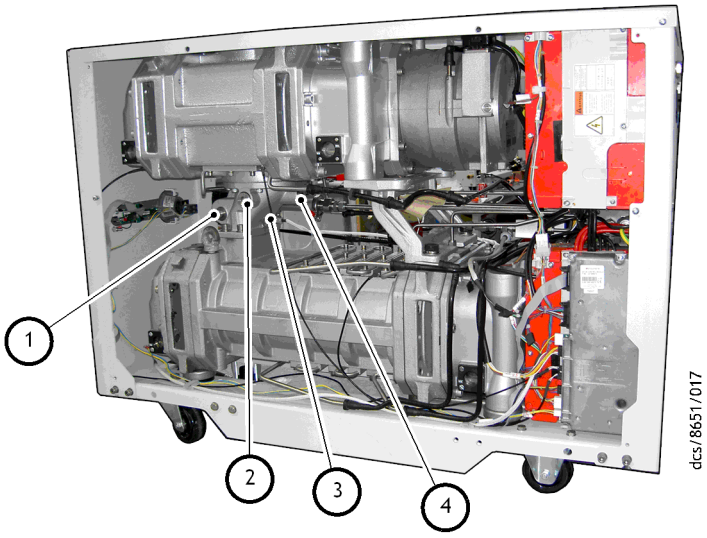

ID	Part identification
1	1/4 inch BSP inlet port (available on dry pumping systems with light duty gas module only)
2	3/8 inch BSP port
3	Interspool
4	3/8 inch BSP port

WARNING:

Leak test the dry pumping system after installation and seal any leaks found to prevent leakage of dangerous substances out of the dry pumping system and leakage of air into the dry pumping system.

The pump and booster combination systems have an interspool which has several ports that can be used for leak checking purposes. Remove the right hand side panel.

Note:

For further information on the leak testing, contact us or the supplier for advice.

3.6 Electrical supply

WARNING:

Ensure that the electrical installation of the dry pumping system conforms to all local, regional and national safety requirements. It must be connected to a suitably fused and protected electrical supply and a suitable earth (ground) point.

WARNING:

Risk of electric shock. Isolate the electrical supply before disconnecting the electrical supply cable from the dry pumping system.

WARNING:

Ensure that the dry pumping system and the electrical supply cable are suitably protected against earth (ground) faults and that the earth (ground) conductor of the electrical supply cable is longer than the phase conductors in the connector.

WARNING:

A second protective earth (ground) conductor (with a cross-sectional area at least equal to the phase conductor size up to 16 mm^2) must be fitted to the protective earth (ground) stud. Refer to *Figure: The controls/connectors on the rear of the pump (system with rear exhaust and castors/levelling feet fitted)* item 15.

WARNING:

All connections to the interface control must be double insulated or have the equivalent protection. Do not connect the voltages greater than 30 V a.c. or 60 V d.c. to the control/interface connections as the interface control will not provide protection against electric shock.

WARNING:

The power wiring to the dry pumping system must be properly protected.

CAUTION:

All dry pumping systems are supplied already configured for an electrical supply. The dry pumping system cannot be reconfigured between the low voltage (200 V to 230 V) and high voltage (380 V to 460 V) ranges.

CAUTION:

This is an industrial (Class A) product as defined by EN61326. To ensure compliance with European Electromagnetic Compatibility (EMC) requirements for EMC emissions, please note that it is not intended for use in domestic buildings, or in the properties directly connected to an electrical supply network which also supplies domestic buildings.

CAUTION:

Do not connect voltages greater than specified in *Table: Electrical connections* to the control/interface connections as it may cause damage to the interface control.

To use the dry pumping system with a power supply in a different voltage range to that specified on the rating plate, contact us.

The dry pumping system is protected from motor overloads and short circuits by solid-state electronics. The power wiring between the dry pumping system and the electrical installation must be protected. When selecting input fuses, refer to *Electrical data* on page 20. Pump rating information can be found on the label on the rear of the pump.

To connect the electrical supply to the dry pumping system through an ELCB (or RCD depending on territory) it must be suitable for protection of equipment with a d.c. component in the fault current, for short duration switch-on surges and high leakage current (for example, type B, according to EN50178).

The secondary protective earth (ground) is required in case of a failure of the primary earth and because pump filters can cause high earth leakage currents. Refer to *Table: General electrical data*.

3.6.1 Mains supply cable connection

WARNING:

The Harting connector is not approved for connection and disconnection under load.

Three different types of electrical supply connector are used on the dry pumping systems. A kit of parts containing the correct mating half connector is supplied with each dry pumping system. Refer to *Electrical data* on page 20 for the details of the connector types and the dry pumping systems to which they are fitted. Information for wiring each of these different connectors is given in:

- *Figure: The Harting Han® K 4/4 cable-mounted connector*
- *Figure: The Harting Han® 100A axial screw module cable-mounted connector*
- *Figure: Customer connection kit - combination low volts GXS750*.

For appropriate electrical connector for the dry pumping system, refer to:

- *Figure: The Harting Han® K 4/4 cable-mounted connector*
- *Figure: The Harting Han® 100A axial screw module cable-mounted connector*
- *Figure: Customer connection kit - combination low volts GXS750*

Use the following instructions to make the electrical supply cable:

1. Refer to *Electrical data* on page 20 for cable sizes and type to determine the most appropriate cable for the dry pumping system.

   Note:

   The kit of parts for the dry pumping systems with the Harting Han® 100 A and Han® 200 A axial screw modules may contain a choice of inserts suitable for different wire sizes as detailed in Table: Electrical connections. Ensure that the correct insert for the size of the wire that is to be used is selected.

2. Screw the cable gland onto the hood.

Note:

The connector kit for the Han® K 4/4 contains a choice of 5 different rubber inserts that are suitable for the cables with various outside diameters. Select the most suitable rubber insert for the size of cable that is to be used.

3. Pass the cable through the cable gland and hood. Cables must be bare-ended without ferrules to ensure correct clamping in the connector block.
4. Before starting the assembly, use the hex (allen) key specified in the appropriate figure to ensure that all the axial cones of the connector insert(s) are screwed fully downward to completely open the contact chambers.
5. Carefully remove the cable insulation to the exact dimension specified in the appropriate figure. Do not twist the cable strands.
6. Referring to the appropriate figure to identify the connections, insert each wire completely into the contact chamber until the copper strands reach the bottom. Keep the cable in position while applying the recommended tightening torque.
7. Fit the earth (ground) wire to the protective earth connection.

Note:

The protective earth connection on the Han® 100 A and Han® 200 A connectors is on the hinged frame. It may be necessary to use one of the cable shoes (supplied) to fit the earth (ground) wire. Choose the most appropriate shoe for the size of cable that is to be used.

8. Screw the connector insert into the hood (using the hinged frame for the Han® 100 A and Han® 200 A axial screw modules) and then tighten the cable gland.
9. If required, fit the coding pins to the connector block as shown in the appropriate figure.

Note:

Harting (the manufacturer of the connector) states that after initial assembly, the recommended tightening torque must only be reapplied once to avoid the damage to the individual cable strands.

10. The dry pumping system has an electrical connector locking mechanism - there are two different types fitted depending on pump variant.

For the locking mechanism for all GXS160, GXS250 and GXS450 dry pumping systems, refer to *Figure: Electrical connector locking mechanism for the GXS160, GXS250 and GXS450 systems*.

This locking mechanism requires the use of a suitable screwdriver to release. Refer to *Figure: Electrical connector locking mechanism for the GXS160, GXS250 and GXS450 systems*. The dry pumping system is supplied with a protective cover (item 5) fitted and the locking mechanism (item 1) may be applied. The protective cover is held in a place by two locking levers. Follow these instructions to fit the electrical supply cable:

- Slacken off the locking screw (item 3) by few turns to loosen the locking mechanism if necessary.
- Move the locking mechanism (item 1) to the left as far as possible, then lift it so that it rotates around the pivot screw (item 2) and clears the left hand lever (item 4).

- Push back both the levers (item 4) to release the protective cover.
- Remove the protective cover and fit the electrical supply cable.
- Pull both levers back towards the user to lock the electrical supply cable connector in place.
- Push the locking mechanism down as far as possible and then push to the right so that it prevents the left hand lever from actuating.
- Tighten the locking screw (item 3) to firmly hold the locking mechanism in place.
- Connect the other end of the electrical supply cable to the electrical supply through a suitable isolator.

For the locking mechanism for all GXS750 dry pumping systems, refer to *Figure: Electrical connector locking mechanism for the GXS750 systems*.

This locking mechanism is held in a place by two M5 locking nuts and requires use of a suitable spanner to release. Referring to *Figure: Electrical connector locking mechanism for the GXS750 systems*, the dry pumping system is supplied with a protective cover (item 1) fitted and the locking mechanism (item 3) may be applied. The protective cover is held in place by two locking levers (item 2). Follow these instructions to fit the electrical supply cable:

- Slacken off the two locking nuts (item 4) by few turns to loosen the locking mechanism.
- Move the locking mechanism (item 3) to the right as far as possible so that it clears the right hand lever (item 2).
- Push back both the levers (item 2) to release the protective cover.
- Remove the protective cover and fit your electrical supply cable.
- Pull both levers back towards you to lock your electrical supply cable connector in place.
- Push the locking mechanism as far as possible to the left so that it prevents the right hand lever from actuating.
- Tighten the locking nuts (item 4) to firmly hold the locking mechanism in place.
- Connect the other end of the electrical supply cable to the electrical supply through a suitable isolator.

If further information is required about connecting the electrical supply, contact us for advice.

Figure 7 The Harting Han® K 4/4 cable-mounted connector

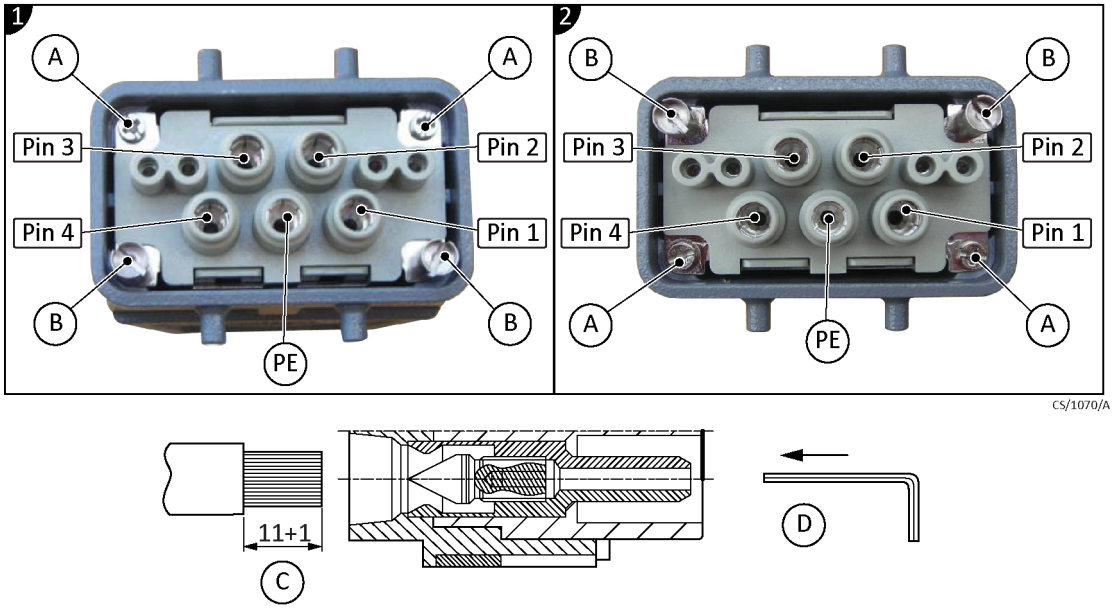

1. Low volt pin configuration
2. High volt pin configuration

A. Mounting screw
B. Coding pin
C. Insert stranded wire
D. 2.5 mm hex (allen) key

Pin identification	
Pin 1	Phase 1
Pin 2	Phase 2
Pin 3	Phase 3
Pin 4	Not connected
PE	Protective earth

Torque settings for connector pins	
Cable size (mm^2)	**Maximum torque setting (Nm)**
6	2
10	3
16	4

Figure 8 The Harting Han® 100 A axial screw module cable-mounted connector

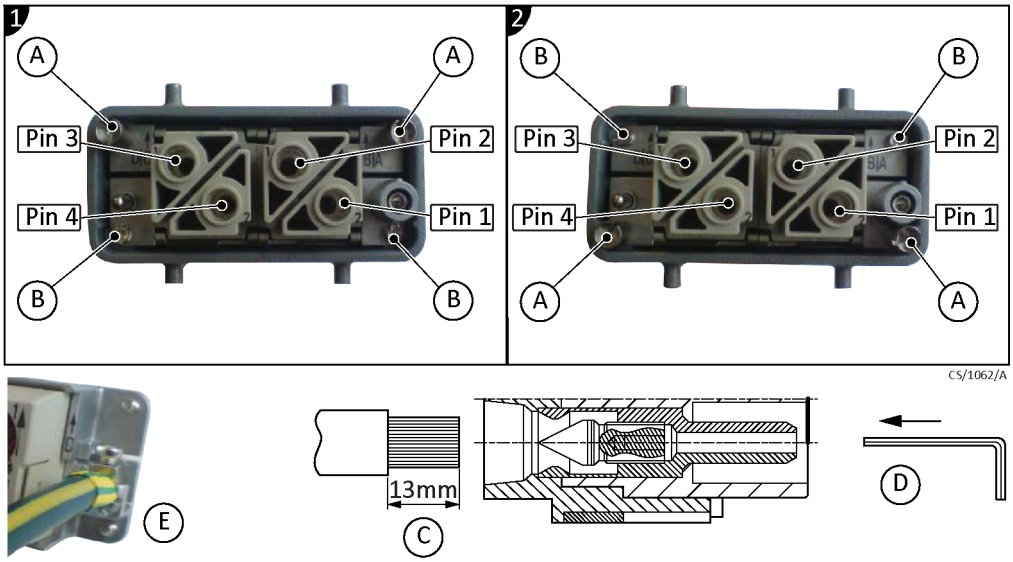

1. Low volt pin configuration
2. High volt pin configuration

A. Coding pin
B. Mounting screw
C. View from cable side: connect protective earth into earth terminal
D. 4 mm hex (allen) key
E. Insert stranded wire

Pin identification	
Pin A1	Phase 1
Pin A2	Phase 2
Pin D1	Not connected
Pin D2	Phase 3

Torque settings for connector pins	
Cable size (mm^2)	**Maximum torque setting (Nm)**
10	6
16	6
25	7
35	8

3.6.2 Customer connection kit, combination low volts GXS750

Tools and equipment:

- No 1 Pozidrive screwdriver
- 5 mm hexagonal allen key bit
- Torque driver set to 10 Nm

Figure 9 Customer connection kit - combination low volts GXS750

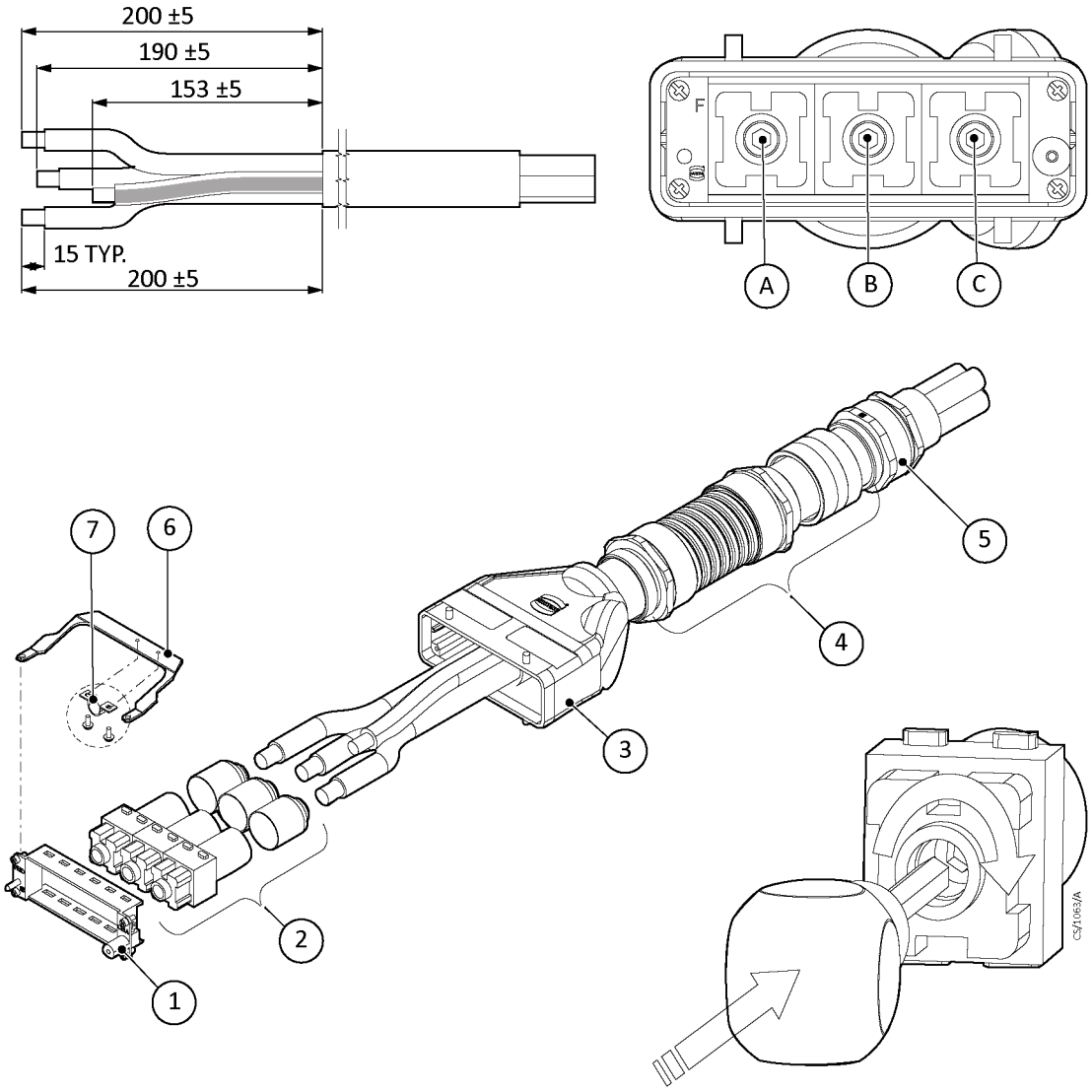

A. Phase 3
B. Phase 2
C. Phase 1

1. 24 Frame hood 6 module A-F
2. 200 A female insert 4-70 mm^2
3. 24 Hood M50
4. Conduit sleeve kit 50 mm LV GXS
5. Cable gland M50 × 1.5
6. Earth terminal 24B LV connection kit GXS
7. Clamp for 10 mm cable diameter ground terminal

Figure 10 Electrical connector locking mechanism for the GXS160, GXS250 and GXS450 systems

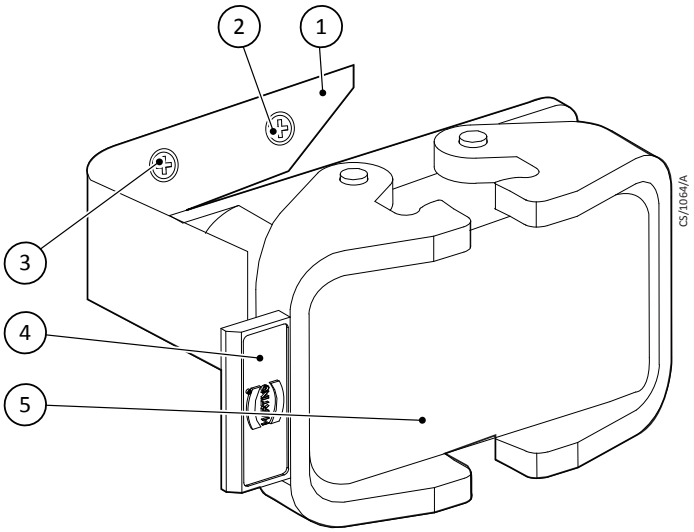

1. Electrical connector locking mechanism
2. Pivot screw
3. Locking screw
4. Lever (2 off)
5. Protective cover

Figure 11 Electrical connector locking mechanism for the GXS750 systems

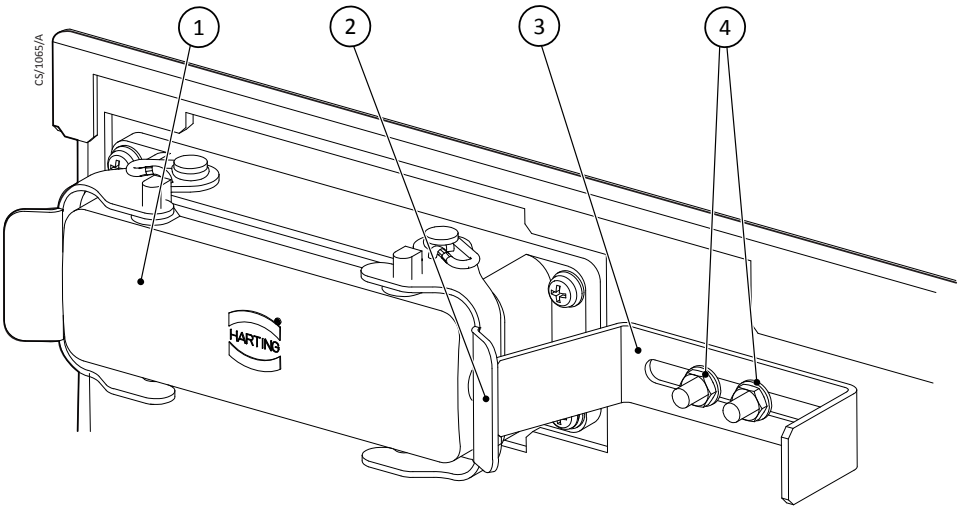

1. Protective cover
2. Lever (2 off)
3. Electrical connector locking mechanism
4. Locking nuts

3.7 Connect an additional RF earth (ground) (optional)

If the dry pumping system will be operated in an area subject to high Radio Frequency (RF) emissions, in accordance with a good RF installation practise, we recommend to:

- use a star washer to connect the end of the earth (ground) cable connected to the dry pumping system inlet to one of the bolts that are used to secure the inlet flange. Refer to *Figure: Front view of the pumping system with the side exhaust and skids fitted*, item 6.
- connect an additional earth (ground) cable to the RF earth (ground) stud. A suitable low-impedance cable must be used (for example, braided cable). Refer to

Figure: The controls/connectors on the rear of the pump (system with rear exhaust and castors/levelling feet fitted), item 19.

3.8 Connect to the emergency stop circuit

Note:

If not connecting to own control equipment, the external EMS link plug supplied to the EMS connection on the rear of the dry pumping system must be fitted. Failure to do so will result in not being able to operate the dry pumping system. Refer to (Figure: The controls/connectors on the rear of the pump (system with rear exhaust and castors/ levelling feet fitted), item 22).

If required, customer's control equipment can be connected to the dry pumping system to shut it down in an emergency using the EMS connection. The emergency stop control must be compliant with IEC 60947-5-1. This should be a red self-latching mushroom push button on a yellow background. Refer to (*Figure: The controls/connectors on the rear of the pump (system with rear exhaust and castors/levelling feet fitted)*, item 22).

3.9 Connect and set up the cooling water

WARNING:

Do not turn on the cooling water supply until the completion of the electrical installation of the dry pumping system or condensation may form inside the enclosure and there may be a risk of electric shock.

CAUTION:

Remove both the outer dust caps and inner plastic plugs from the water inlet and outlet fittings before connecting the cooling water hoses.

CAUTION:

Do not apply excessive torque to the water fittings when connecting the water supply to the dry pumping system as this may cause damage to the manifold. Use a suitable spanner to prevent the bulkhead fittings on the dry pumping system from turning while tightening up the connectors.

CAUTION:

Fit the inlet strainer (supplied Y strainer) into the supply side of the cooling water system to prevent damage to the cooling system within the dry pumping system.

Notes:

1. For optimum water cooling, ensure that the cooling water supply meets the specification given in Cooling-water data on page 25. Ensure that the water supplies are connected in parallel. Refer to Figure: The controls/connectors on the rear of the pump (system with rear exhaust and castors/levelling feet fitted), items 17 and 13.

2. For minimum water consumption, regulate the cooling water flow to the dry pumping system.

The dry pumping system is supplied with blue plastic dust caps fitted over the outside of the water inlet and outlet fittings and with red plastic plugs fitted inside these water fittings. Ensure that both sets of plastic plugs are removed before connecting the cooling water hoses. Refer to *Figure: Remove the plastic plugs from the water fittings*. Retain the plastic plugs for future use.

Figure 12 Remove the plastic plugs from the water fittings

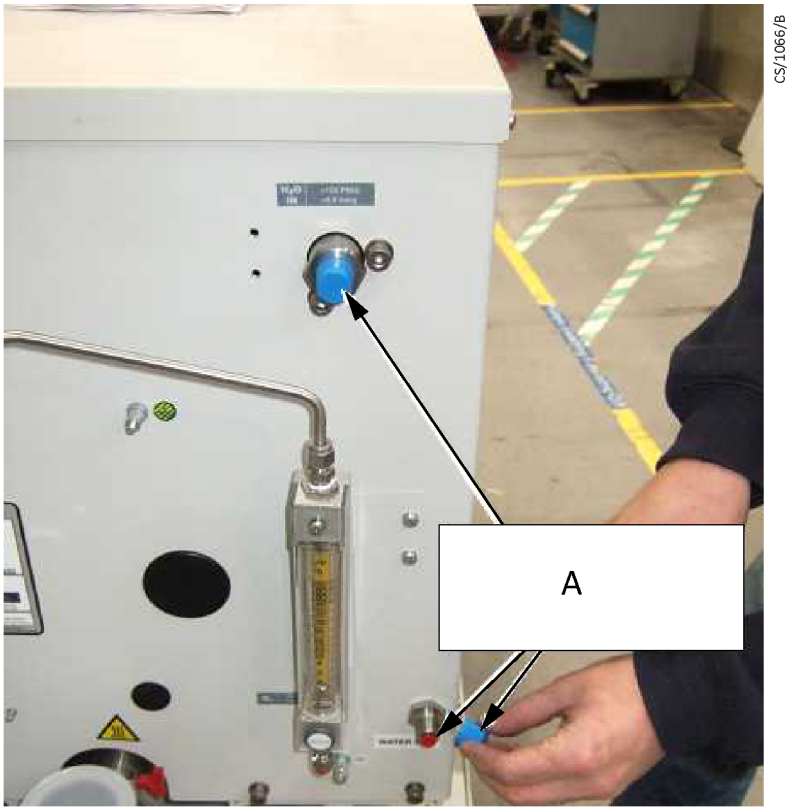

A. Remove outer (blue) caps and inner (red) plastic plugs

**optional nitrogen flow meter is shown in the image.*

Fit the inlet strainer and then use the following procedure to connect the cooling water supply and ensure that the dry pumping system is receiving the correct water flow rate. Before starting, ensure that the electrical power supply to the dry pumping system is switched off.

1. Use BSP pipe fittings (not supplied) to fit to the cooling water supply and return hoses.
2. Connect the water return hose to the cooling water outlet (refer to *Figure: The controls/connectors on the rear of the pump (system with rear exhaust and castors/levelling feet fitted)* item 17). Fit a water flow meter into the water supply line close to the pump and then connect the water supply hose to the cooling water inlet (refer to *Figure: The controls/connectors on the rear of the pump (system with rear exhaust and castors/levelling feet fitted)*, item 13). Take care not to turn the bulkhead fittings on the pump when tightening up the connectors.
3. Turn on the cooling water supply.

4. Switch on the electrical power to the dry pumping system. All the water valves in the pump cooling system will automatically open for a period of around 10 seconds.
5. Adjust the water flow rate so that it meets the requirements given in *Table: Water consumption data (GXS160/250/1750/2600)*. Note that the water valves will all close again after 10 seconds and the flow rate displayed by the water flow meter will decrease (this is normal). If necessary, cycle the power to the pump to re-open the valves for a further 10 seconds to continue setting the water flow rate.
6. Once the water flow rate has been set the water flow meter may be removed.
7. Inspect the water hoses, pipelines and connections and check that there are no leaks.

Turn off the water supply while completing the remainder of the installation procedures.

3.10 Accessories

WARNING:

When fitting accessories inside the enclosure, ensure that the pump is switched off. Lockout and tagout the electrical supply before removing the enclosure panels.

WARNING:

The surfaces of the dry pump, booster and spools are very hot when the dry pumping system is running. Allow these surfaces to cool to safe temperatures before installing the accessories inside the enclosure. Be sure to route and secure accessory cables as shown in their installation manuals to prevent the cables from resting on hot surfaces.

CAUTION:

The power to the dry pumping system must be switched off when the MCM MicroTIM or active accessory module is installed or removed. If it is not, these modules may be damaged. Refer to the appropriate accessory manual for more information.

CAUTION:

The relays fitted in the MicroTIM are not suitable for switching inductive loads. If the MicroTIM is connected to an inductive load (for example, a solenoid coil) then suitable precautions should be taken. Fitting a flyback diode, of correct current and voltage rating is recommended.

Refer to the individual accessories manuals for information about installation.

Refer to *How to set up the MCM MicroTIM using the PDT* on page 156 for instructions on how to set up the MCM MicroTIM using the PDT.

3.11 Commission the dry pumping system

WARNING:

During some application cycles, the dry pumping system may exceed the OSHA 1910.95 Occupational Noise Exposure Limits, the EU noise directive 2003/10/EC or other regional noise limits dependent upon the process, duty cycle, installation or environment in which the dry pumping system is being operated. A sound pressure survey must be conducted after installation. If necessary, the controls must be implemented to ensure that the relevant limits are not exceeded during the operation and that adequate precautions are taken to prevent the person from exposure to the high noise levels during the operation.

1. Switch on the external electrical supply and check that the power LEDs (*Figure: Front panel controls*, item 7 and *Figure: The controls/connectors on the rear of the pump (system with rear exhaust and castors/levelling feet fitted)*, item 4) goes on. If the LEDs do not go on, contact us.
2. Switch on the cooling water and purge gas supplies.
3. Ensure that the exhaust extraction system is not blocked (for example, that valves in the exhaust extraction system are open).
4. Ensure that all openings to atmospheric pressure in the foreline vacuum system are closed.
5. Press and hold the local control button (*Figure: Front panel controls*, item 5) and check that the green local control LED (*Figure: Front panel controls*, item 6) comes on and then remains continuously illuminated.
6. Press START button (*Figure: Front panel controls*, item 3).
7. If the dry pumping system starts and continues to operate, continue at step 8. If a warning or alarm condition is indicated:
   - Shut down the dry pumping system. Refer to *Manual shut down* on page 59.
   - Contact us.
8. Look at the pressure gauge in the inlet pipeline:
   - If the pressure is increasing, immediately shut down the dry pumping system and contact us.
   - If the pressure is decreasing, continue to step 9.
9. Visually check the purge gas dial pressure gauge on the rear of the pump to ensure that the purge gas is being delivered to the pump. Continue to check the dial pressure gauge regularly as the dry pumping system is used.
10. After the dry pumping system is commissioned:
    - To continue to operate the dry pumping system, refer to *Start up* on page 54.
    - Otherwise, shut down the dry pumping system. Refer to *Manual shut down* on page 59.

3.12 Install additional safety equipment

WARNING:

If the control system needs to know the total flow rate of purge gas to the dry pumping system for safety reasons, install suitable measurement equipment in the purge gas supply pipeline.

WARNING:

If the gas purges are used to dilute dangerous gases to a safe level, ensure that the dry pumping system shuts down if the purge gas supply to the dry pumping system fails.

If the total flow rate of purge gas to the dry pumping system is required to be known for safety reasons, suitable measurement equipment should be fitted in the purge gas supply pipeline. If fitting a rotameter, ensure that it is suitable for use with the purge gas and that it is correctly calibrated.

Ensure that the installation is configured so that it remains safe if there is a failure of the purge gas supply to the dry pumping system.

If an alarm condition is detected, the dry pumping system will shut down automatically. Ensure that the installation remains safe if the dry pumping system shuts down automatically.

3.13 Purge gas set up

There are two types of gas module used on dry pumping systems. Refer to *Purge data* on page 18. The gas module configuration may be adjusted to suit process demands. Contact our service personnel for instruction on how to access the gas valves menu (by the PDT) and for the process-specific recommendations.

For dry pumping systems using the medium-duty gas module, there is an adjustable needle valve fitted to the purge pipe which enables the adjustment of the level of gas ballast to suit the application.

Use the following procedure to adjust the gas ballast:

1. Remove the left hand side panel of the dry pumping system.
2. Identify the adjustable needle valve on the purge pipe (contact us for guidance).
3. Adjust the needle valve until the required flow is met. Refer to *Purge data* on page 18 for the purge gas flows.
4. Refit the left side panel.

For GXS450 and GXS750 dry pumping systems with medium-duty gas module, there is an additional electronically controlled gas ballast available for harsh applications. By default, these dry pumping systems are supplied with this additional gas ballast switched off but it can be enabled using the PDT.

Use the following procedure to enable the additional gas ballast:

1. Press the SETUP button on the PDT to enter the SETUP menu.
2. Scroll using the UP/DOWN keys and select the FIT ACCESSORY menu.

3. An access code is needed to enter the FIT ACCESSORY menu. Enter 538 when prompted.
4. From the FIT ACCESSORY menu, scroll down to GAS BALLAST and then select ENTER.
5. Scroll down to 'Fitted' and press ENTER to select.
6. The additional gas ballast is now enabled.

3.14 High flow purge and solvent flush set up

WARNING:

By default the DP clean high flow purge and solvent flush assembly draws the atmospheric air into the dry pumping system. If air is not compatible with the user's process then nitrogen or another inert gas may be used. It is the responsibility of the user to assess whether the DP clean purge gas is compatible with the process.

WARNING:

We recommend the use of water and diluted Loctite® 7840 or Loctite® Natural Blue® when performing a solvent flush procedure. It is the responsibility of the user to assess whether the Loctite® 7840/Natural Blue® is compatible with the application. For more information refer to the Loctite® MSDS and technical datasheet. The manufacturer states that the Loctite® 7840 and Loctite® Natural Blue® are not recommended for use in pure oxygen and/or oxygen rich systems and should not be selected as a sealant for chlorine or other strong oxidizing materials.

For queries about the solvent compatibility, contact our applications specialists.

WARNING:

Hot steam and liquid will exit the pump during the solvent flush procedure. Ensure that the exhaust is piped away safely and solvents are disposed of in accordance with the local and national safety and environmental requirements.

CAUTION:

If an inert gas is used in place of atmospheric air for the DP clean purge gas, ensure it is regulated to atmospheric pressure otherwise the DP clean process may not work properly and may cause damage to the pump.

The high flow purge and solvent flush procedures are performed by a single assembly which is supplied as an option fitted in the factory. The actuating valve is operated pneumatically. Ensure that the pneumatic gas supply meets the specification given in *DP clean high flow purge/solvent flush option* on page 27.

Use a 3/8 inch compression fitting (not supplied) to connect the pneumatic supply to the dry pumping system. For the pump and booster combinations, the pneumatic inlet connection is on the rear pump panel (refer to *Figure: The controls/connectors on the rear of the pump (system with rear exhaust and castors/levelling feet fitted)* item 10). For the pump-only systems, refer to *Figure: DP clean assembly for the pump only systems*, item 4.

The pneumatic regulator is pre-set to 50 ± 5 psig in the factory and does not need to be adjusted. The pneumatic regulator is shown in *Figure: DP clean assembly for the pump only systems*, item 5 for the pump-only systems. For pump and booster combination systems, the regulator is contained within the pump enclosure.

To use an inert gas in place of atmospheric air as the DP clean purge gas, remove the air filter and in its place connect up the inert gas supply. For pump and booster combinations, the air filter is on the rear pump panel (refer to *Figure: The controls/connectors on the rear of the pump (system with rear exhaust and castors/levelling feet fitted)*, item 12). For pump-only systems, refer to *Figure: DP clean assembly for the pump only systems*, item 1. Refer to *DP clean high flow purge/solvent flush option* on page 27 for information about fittings and typical purge gas flows.

A solvent suction pipe is provided with the pump. When only performing a high flow purge procedure, the solvent suction pipe will not be needed. When performing a solvent flush, fit the solvent suction pipe only when ready to perform the DP clean procedure. For pump and booster combinations, the solvent flush fluid connection is on the rear pump panel (refer to *Figure: The controls/connectors on the rear of the pump (system with rear exhaust and castors/levelling feet fitted)*, item 11). For pump-only systems, refer to *Figure: DP clean assembly for the pump only systems*, item 2.

A PDT is required to operate the DP clean high flow purge and solvent flush.

Figure 13 DP clean assembly for the pump only systems

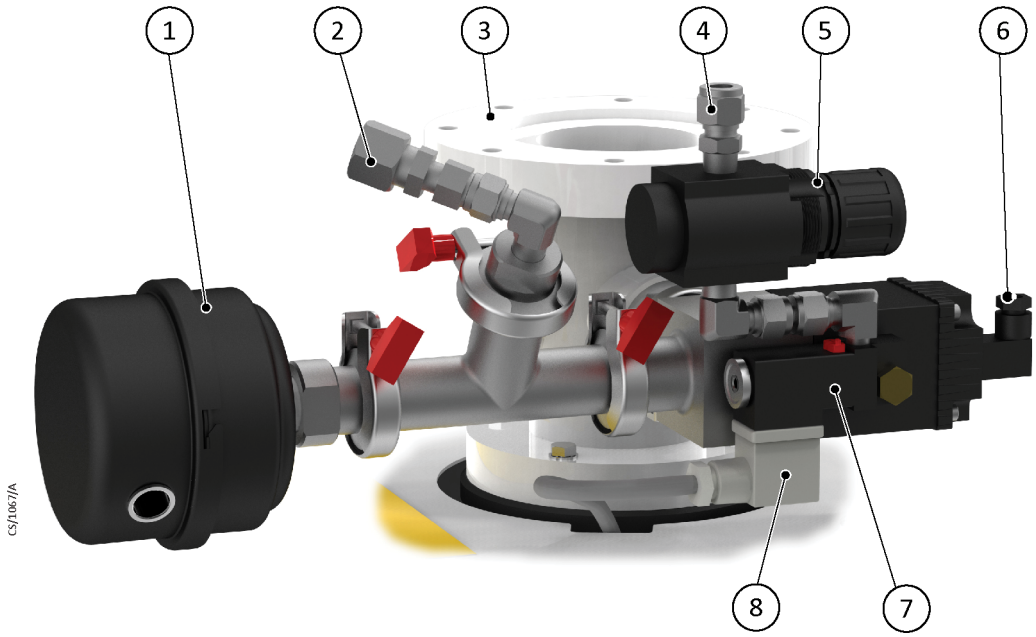

1. Air filter
2. DP clean solvent flush fluid connection
3. Inlet spool
4. Pneumatic valve inlet connection
5. Pneumatic regulator
6. Optional connection to the pneumatic valve sensor
7. Pneumatic valve
8. Pneumatic valve electrical connection

3.15 Connecting the dry pumping system for serial communications

3.15.1 Serial port connection

The dry pumping systems have two 5-way XLR sockets that can be used to connect the pump for the serial communications. The user can connect by the PDT connector on the front of the pump, (refer to *Figure: Front panel controls* item 11) and by the system interface on the rear of the pump (refer to *Figure: The controls/connectors on the rear of the pump (system with rear exhaust and castors/levelling feet fitted)* item 5).

An adaptor cable, part number D373-70-754, is available as an accessory. The cable is 2 m long with a 5-way XLR plug on one end and a 9-way D connector socket on the other, allowing connection from the dry pumping system to a standard COM port on a computer. Should the user prefer to make their adaptor cable, refer to *Table: Electrical connections* for the pin-out of the XLR connectors.

Note:

Some personal computers no longer come equipped with a standard 9 way D connector COM port. In this case, a USB to RS232 adaptor can be obtained.

For information about using SIM protocol with a serial port, refer to *How to use SIM protocol with a serial port* on page 155.

3.15.2 Ethernet connection

Connect the Ethernet cable to the pump by the Ethernet connection on the rear of the pump. Refer to *Figure: The controls/connectors on the rear of the pump (system with rear exhaust and castors/levelling feet fitted)* item 3.

Refer to *How to set up the Ethernet port* on page 151 for information on how to set up and use the Ethernet port.

4. Operation

WARNING:

Do not operate the dry pumping system with the lifting eyebolts fitted or with any enclosure panels removed or damaged. Do not touch any parts of the pump(s) when the dry pumping system is on. Surfaces of the pumps are very hot and can cause injury to people.

WARNING:

Do not operate the dry pumping system with any enclosures removed or damaged as there may be a risk of an electric shock.

4.1 Start up

WARNING:

Ensure that it is safe to start the dry pumping system. Failure to do so (for example, maintenance is being performed on components downstream of the dry pumping system) could cause injury to people.

WARNING:

After the power is applied, all mains circuits will be energised.

CAUTION:

The dry pumping system is designed to ride through transient power interruptions and to automatically restart once the power is restored.

CAUTION:

Do not operate the pump if the pipeline is restricted or blocked as the pump will not operate correctly and may be damaged.

1. Switch on the cooling water and purge gas supply.
2. Switch on the electrical supply.
3. Check that the exhaust extraction system is not restricted and the valves in the exhaust extraction system are open.

The pump can be started using either the MCM MicroTIM, the PDT, the front panel control or by commands sent using the serial interfaces. Refer to *Priority of control* on page 11 for the information about taking the control of the dry pumping system.

4.1.1 MCM MicroTIM operation

If the dry pumping system is to be operated by the user's control equipment by the MCM MicroTIM, ensure that no other devices have control of the dry pumping system. If another device has the control, it must be released before the pump can be started by the MCM MicroTIM.

- Use the control equipment to set the pump start/stop signal to the interface connector and check that the running LEDs are illuminated.
- The MCM MicroTIM takes control. The message 'MTIM IN CONTROL' will be displayed on the PDT if connected. The green tool control LED on the rear panel will illuminate. Refer to *Figure: The controls/connectors on the rear of the pump (system with rear exhaust and castors/levelling feet fitted)*, item 9.

4.1.2 PDT operation

If the dry pumping system is to be operated using the PDT:

- Connect the PDT to the required PDT connection.
  - Front - *Figure: Front panel controls*, item 11
  - Rear - *Figure: The controls/connectors on the rear of the pump (system with rear exhaust and castors/levelling feet fitted)*, item 5
- Control must be taken with the PDT - press Control button. The message 'PDT1 IN CONTROL' will be displayed if the front connection is used and the message 'PDT2 IN CONTROL' will be displayed if the rear connection is used.
- Press START button. Refer to *Pump display terminal* on page 120 for more information.
- Press ENTER.
- The dry pumping system will start and the running LED on the pump and the Pump on LED on the PDT will flash while the pump is coming on and warming up. These LEDs will stop flashing and remain illuminated continuously once the pump is on-process.

4.1.3 Front panel control operation

To operate the dry pumping system using the front panel controls (refer to *Figure: Front panel controls*):

- Press and hold the local control button (item 5). The green local control LED (item 6) will illuminate continuously when control is taken. The message 'Keys in Control' will be displayed on the PDT if connected.
- Press and hold the start button (item 3) until the pump starts. The running LED (item 2) and Green mode LED (item 10) will both flash while the pump is coming on and warming up. Once the pump has warmed up and is ready for the process, the running LED will remain illuminated continuously and the Green mode LED will go off.

4.1.4 Start, warm-up and on-process sequences

The dry pumping systems are shipped with a number of pre-programmed sequences. Many of the parameters are configurable. The parameters can be configured using a PDT

(refer to *Pump display terminal* on page 120). The PDT is available as an accessory. Refer to *Accessories* on page 77.

Table 18 Start, warm-up and on-process sequences

Sequence	Description
Start pump	Shaft Seal Purge (SSP) valve is opened.
	Pump runs.
Warm-up	Pump runs at 110 Hz until it reaches the working temperature and then goes on-process (default auto on-process).
On-process	Inlet isolation valve opened (if fitted).
	Pump speed from the standby (Green mode) to full speed may be ramped by configurable increments instead of going straight to full speed.
	Pump will not go on-process if there are active warnings.
	Pump may be configured to ignore warnings and go straight onto process.
	Gas ballast is opened (if fitted, medium-duty pumps only).

4.2 Status indicators

The dry pumping system has a number of LEDs that indicate pump status. The status LEDs are found:

- on the front panel controls. Refer to *Figure: Front panel controls*
- on the rear panel. Refer to *Figure: The controls/connectors on the rear of the pump (system with rear exhaust and castors/levelling feet fitted)*.

Table 19 Status indicator LEDs

Indicator Name	LED colour	Location	Meaning
Power	Green	Front panel (item 7) Rear panel (item 4)	Illuminates continuously when the system has power.
Front panel control	Green	Front panel (item 6)	Illuminates continuously to indicate the front panel is 'in control'.
Tool control	Green	Rear panel (item 9)	Illuminates continuously to indicate the MCM MicroTIM is 'in control'.
Pump running	Green	Front panel (item 2) Rear panel (item 7)	Illuminates continuously when the pump is running on-process. Flashes to indicate that the pump is warming up, shutting down or in Green mode/standby mode. Refer to *Determining the pump status* on page 57.

Indicator Name	LED colour	Location	Meaning
Green mode/ Standby	Green	Front panel (item 10)	Illuminates continuously when the pump is in Green mode/standby mode. Flashes to indicate that the pump is warming up. Refer to *Determining the pump status* on page 57.
Warning	Yellow	Front panel (item 8) Rear panel (item 6)	Illuminates continuously to indicate a pump warning. Flashes to indicate an internal communication problem. Refer to *Pump controller communications* on page 173.
Alarm	Red	Front panel (item 9) Rear panel (item 7)	Illuminates continuously to indicate a pump alarm. Flashes to indicate an internal communication problem. Refer to *Pump controller communications* on page 173.
Ethernet LAN	Green	Rear panel (item 1)	Flashes to indicate that there is a network traffic and Ethernet packets are being received.
Ethernet Link	Yellow	Rear panel (item 2)	Illuminates continuously to indicate that the Ethernet protocol is active.

4.2.1 Determining the pump status

It is not possible to fully determine the pump status by referring to only one status LED. By looking at both the running LED and Green mode/standby LED together, the user can work out the pump status. Refer to *Table: Pump status*.

Table 20 Pump status

Pump running LED	Green mode/Standby LED	Pump status
Off	Off	Pump stopped
Flashing	Flashing	Pump warming up
Flashing	Illuminated continuously	Pump is in Green mode/standby mode
Illuminated continuously	Off	Pump is on-process
Flashing	Off	Pump is shutting down

4.3 Green mode/standby mode

Green mode is used to reduce the power and purge gas consumption of the pump when off process. All dry pumping systems can support up to 9 different Green mode configurations. By default, only one green mode is enabled. To enable alternative Green mode configurations please contact our local service representative.

Refer to *Figure: Front panel controls*. To enable the Green mode/standby mode when the pump is running and warmed up, press and hold the start button (item 3) for 5 seconds. The pump green mode LED (item 10) will illuminate continuously. The pump running LED (item 2) will flash.

To disable Green mode/standby mode, and therefore to enable the on-process mode, press and hold the start button (item 3) for 5 seconds. If the pump has warmed up, the pump green mode LED (item 10) will go out and the pump running LED (item 2) will illuminate continuously. If the pump has not warmed up, both the Green mode LED and the pump running LED will flash until the pump is fully warm. The Green mode LED will then go out and the running LED will illuminate continuously to indicate that the pump is now on-process.

Table 21 Green mode/standby sequence

Sequence	Description
Green mode/Standby	Inlet isolation valve is closed (if fitted).
	Pump runs at standby (Green mode) speed.
	Gas ballast valve is closed (medium-duty pumps only).
	If the pump temperature drops below working temperature then it will start to warm up again.
	Pump ready line will be off if pump is not warmed up.

The dry pumping system can also be set into Green mode/standby mode using the following methods:

- PDT, by the commands menu. Refer to *Commands menu* on page 124.
- MCM MicroTIM. Refer to the MicroTIM manual D37360880.
- By commands sent over the serial interface using the SIM protocol. Refer to the SIM Manual P41100200, or using the E54 protocol.

4.4 Pumping Argon

Due to its inert nature, Argon is commonly used in the heat treatment and other metallurgical applications, especially at high temperatures. The thermodynamic properties of Argon can give challenges and difficulties when it comes to the vacuum pumping systems. The inherent thermal properties of Argon including its inefficiency to transfer heat away to the cooling system which, if not controlled, can cause the problems for dry vacuum pumps. If heat is not successfully removed from the rotors, a differential thermal expansion can cause seizures.

The GXS160, GXS250 and GXS450 (with or without booster) can pump Argon with no restrictions.

The GXS750, GXS750/2600 or GXS750/4200 is capable of pumping Argon but not continuously at all pressures. At 110 Hz, the continuous operating range is restricted to less than 20 mbar at the inlet to screw pump (this is equivalent to 10 mbar at the inlet to booster). To extend the continuous operating range up to 500 mbar and to enable the pump down of the large chambers, the operating speed of the pump must be reduced to 80 Hz. This is valid with Argon at ambient temperature.

Evacuating the chambers back-filled with Argon

- For small chambers less than 2 m^3 (70 cft) or if chamber pressure reaches 20 mbar in under 2 minutes, the chamber evacuation is short enough not to cause a problem when pumping at full speed.
- For evacuating chambers between 2 m^3 (70 cft) and 25 m^3 (885 cft), the pump speed should be set at 80 Hz until the pressure is below 20 mbar.
- For evacuating chambers larger than 25 m^3 (885 cft), contact us for more information.

Note:

For prolonged operation (greater than 45 minutes, above 20 mbar and/or the chambers in excess of 25 m^3 (885 cft)), an application review must be done to determine the actual requirement. Contact us for more information.

Shaft seal purge

Nitrogen or the Clean Dry Air (CDA) purge is preferred as it gives a maximum headroom on the critical clearances. Argon can be used as shaft seal purge at 80 Hz and 110 Hz, following the above guidelines for continuous operation and pump down of chambers.

4.5 Manual shut down

WARNING:

If the dry pumping system is shut down and not isolated from the electrical supply, do not disconnect the PDT or release the control from the PDT or front panel. This may result in the dry pumping system being started by another module.

WARNING:

Do not remove the inlet connections until the pump has been allowed to stop rotating and the power has been isolated. The pump can take up to three minutes to completely stop.

CAUTION:

If the pump is stopped without the gas purge cycle on processes that have condensable or solid by-products then the pump may not restart.

CAUTION:

For applications pumping liquids or condensible gases: If the pump is switched off straight after the process then the liquids may remain trapped in the pump. These liquids can corrode the pump mechanism while the dry pumping system is switched off for extended periods and may prevent the pump from starting again. For these applications, we recommend carrying out a Smart Stop with Stop Time set to the maximum 3600 seconds. Once the pump has stopped, seal the inlet and exhaust to prevent migration of liquid/condensable back into the pump mechanism.

The dry pumping system has two manual shut down modes: Fast and Auto.

In Fast shut down mode, no gas purges are introduced and the pump stops quickly. This method of shut down is not recommended.

In Auto shut down mode, a purge gas cycle is introduced and the pump shuts down gradually over a time period. This is the recommended shut down mode and is the default mode on the dry pumping system.

Smart Stop is an additional sequence that allows the user to define the time period for the gradual shut down and to configure a setpoint temperature. If Smart Stop is enabled, the pump will perform a Smart Stop when the user selects Auto shut down.

Refer to *Table: Stop sequences* for the stop sequences.

Table 22 Stop sequences

Sequence	Description
Stop with inlet purge	Inlet purge gas valve is opened (medium-duty pumps only).
	Inlet isolation valve is closed (if fitted).
	Pump runs for 15 minutes before stopping.
	All gas purge valves are closed before the pump stops.
Smart stop	Inlet purge gas valve opened (medium-duty pumps only).
	Inlet isolation valve is closed (if fitted).
	Pump speed is ramped down over configurable shut down time.
	All purge gas valves are closed before pump stops.
	Pump stops after the configurable shut down time or after a configurable time period after the pump temperature is below a configurable setpoint.

The pump can be shut down using either the MCM MicroTIM, the PDT or the front panel controls. Note that only the item in control can stop the pump. Refer to *Priority of control* on page 11.

Note:

The EMS button will always stop the pump. It does not matter which item has control. Refer to Emergency stop on page 62.

If the pump is not going to be required for some time, switch off the electrical supply and the cooling water supply. Seal the pump inlet and exhaust to prevent any moisture in the atmosphere from corroding the pumping mechanism.

4.5.1 MicroTIM operation

Use the control equipment to reset the pump start/stop signal to the interface connector. The Running LEDs will then go off and the pump running status output signal will open. An Auto shut down cycle is always performed when the pump is stopped using the MCM MicroTIM.

4.5.2 PDT operation

Press the stop button on the PDT (refer to *Pump display terminal* on page 120 for more information). Choose whether to select Auto or Fast shut down mode.

4.5.3 Front panel control operation

Press and hold the stop button (*Figure: Front panel controls*, item 4) for 5 seconds to stop the pump in Auto shut down mode (recommended). Repeat within 10 seconds to stop the pump in the Fast shut down mode. The running LED (*Figure: Front panel controls*, item 2) flashes while the pump is slowing down and will then turn off when the pump has shut down.

4.6 Automatic shut down

Normally, if an alarm condition exists, the control system will shut down the dry pumping system. When the dry pumping system shuts down, all the purge gas valves close and the pump stops. For the dry pumping systems containing a dry pump and booster combination, some alarms will cause only the booster to stop, and not the full dry pumping system.

Table 23 Alarm actions

Alarm description	Alarm stops the dry pump	Alarm stops the booster pump
EMS or system configuration fault	Yes	Yes
Exhaust pressure*	Yes	Yes
Booster stator temperature†	No	Yes
Dry pump stator temperature	Yes	Yes
Booster status†	No	Yes
Dry pump status	Yes	Yes

** Not applicable to systems with light-duty gas module.*

† Not applicable to systems which do not contain a booster.

4.7 Unplanned shut down and alarms

The dry pumping system is fitted with a number of pump protection sensors that will give warnings and alarms. Refer to *Table: Pump protection sensors*.

Table 24 Pump protection sensors

Sensor	Warning condition triggered	Alarm condition triggered
Exhaust pressure transducer*	0.3 barg (4.4 psig)	0.4 barg (5.8 psig)
DP TEMP temperature		
GXS160 and GXS160/1750	150 °C	160 °C
GXS250 and GXS250/2600	150 °C	165 °C
All GXS450 dry pumping systems	170 °C	180 °C
All GXS750 dry pumping systems	180 °C	190 °C
MB stator temperature	120 °C	130 °C

** Not available on the dry pumping systems with the light-duty gas module.*

Refer to *Automatic shut down* on page 61 for information about alarms and automatic shutdown conditions.

If the dry pumping system has an unplanned shut down, ensure that the cause of the shutdown is identified and rectified before restarting. If in doubt, contact us.

Note:

The high-temperature alarms on our dry pumping systems are dry pumping system protection trips and should be considered as an abnormal running condition. If a dry pumping system has tripped due to any high-temperature alarm it should be investigated and the reason for the alarm established. Once the fault has been remedied, the dry pumping system should be left for a minimum of 30 minutes before attempting to restart.

4.8 Emergency stop

Note:

The emergency stop switch is not an electrical isolator.

To shutdown the dry pumping system in an emergency, press the emergency stop switch (refer to *Figure: Front panel controls*, item 1). Alternatively, the emergency stop controls can be operated in the user's control system if the emergency stop circuit has been connected to the dry pumping system as described in *Connect to the emergency stop circuit* on page 46.

When emergency stop is selected:

- The dry pump and the booster pump are switched off.
- The solenoid valve(s) in the gas module close, to switch off the supply of purge gas to the pump.
- The solenoid valve(s) in the temperature control manifold(s) de-energise with loss of temperature control.
- The PDT will display 'ALARM 1.01/STOP ACTIVATED' (if connected) or it may display 'ALARM 186.01/ DP INV 0040 0000 / EMS'.
- The running LED will go off.
- The alarm LED illuminates.

4.9 Restart the pump after an emergency stop or automatic shut down

Note:

If the dry pumping system has automatically shut down because of the high pump power, check that the pump is free to rotate before restarting the dry pumping system. Contact us.

If the emergency stop switch on the front panel has been used to shutdown the dry pumping system, the emergency stop switch must be reset before the dry pumping system can be restarted. Turn the emergency stop switch to reset it, then restart the dry pumping system as described in *Start up* on page 54.

If the dry pumping system has been automatically shut down because of an alarm condition, the alarm condition must be rectified before the dry pumping system can be

restarted. If the alarm was caused by high pump temperatures, refer to *Unplanned shut down and alarms* on page 61. Restart the dry pumping system as described in *Start up* on page 54.

4.10 Dry pump clean

The high flow purge and the solvent flush kit is available as a factory-fit option to clean the pump mechanism on applications where large quantities of dust and sticky deposits are encountered. The cleaning process is run while the pump is in green mode/standby mode and is carried out without the need to remove the pump enclosure. A PDT is required to initiate the DP clean process. Refer to *Table: DP clean sequence* for details.

Table 25 DP clean sequence

Sequence	Description
Dry pump clean	▪ Only operates when the pump is running in green mode/ standby mode. ▪ Purge gas or the solvent fluid is admitted into the pump for a configurable time (default 20 minutes). ▪ Pump speed during the dry pump clean is configurable (default 40 Hz). ▪ Gas purges may be configured to be on during the clean cycle and/or for a period after the DP clean valve has closed (default off). ▪ Pump is not able to go on-process until the cycle has completed. ▪ If dry pump clean is stopped by the user then the purge cycle is completed. ▪ DP clean may be configured to start automatically when the pump goes off process.

The DP clean high flow purge and solvent flush procedures can be run as often as required.

4.10.1 High flow purge

Use the following procedure to prepare for the high flow purge:

1. Set up the dry pumping system ready for the high flow purge procedure as described in *High flow purge and solvent flush set up* on page 51.
2. Put the pump into green mode/standby mode. Refer to *Green mode/standby mode* on page 57.
3. Using the PDT, press the Setup button to enter the setup menu and then select the Command menu. An access code is needed to enter the Command menu. Enter 202 when prompted.
4. Scroll down to the DP clean menu and then press ENTER to select.
5. Select 'DP clean on' to start the high flow purge procedure.

The DP clean sequence will run automatically without requiring any operator intervention. Once the DP clean time has elapsed, the dry pumping system will return to green mode/standby mode settings. The pump can then be put back on-process.

To stop the high flow purge process while it is running, enter the DP clean menu again using the PDT and select 'DP Clean off'.

The DP clean procedure can be configured to suit the user's application. Refer to *How to set up the DP clean* on page 141.

4.10.2 Solvent flush

WARNING:

Use of suitable protective gloves and eye protection is recommended when carrying out the solvent flush procedure. Personal protective equipment should be checked and used as specified by its supplier. Refer to the Loctite® 7840 or Loctite® Natural Blue® MSDS for more information.

WARNING:

Take care when handling solvents and water. Any overflows or spills should be cleaned to avoid risk of slips.

WARNING:

Hot steam and liquid will exit the pump during the solvent flush procedure. Ensure that the exhaust is piped away safely and solvents are disposed of in accordance with local and national safety and environmental requirements.

Use the following procedure to perform the solvent flush procedure:

1. Set up the dry pumping system ready for the solvent flush procedure as described in *DP clean high flow purge/solvent flush option* on page 27 and take note of the safety warnings regarding the process compatibility.
2. Fit the solvent suction pipe supplied. For pump and booster combination systems, the solvent flush fluid connection is on the rear panel. Refer to *Figure: The controls/connectors on the rear of the pump (system with rear exhaust and castors/levelling feet fitted)*, item 11.
   For pump-only systems, refer to *Figure: DP clean assembly for the pump only systems*, item 2.
3. Make 5 litres of the solvent solution using 1 litre of Loctite® 7840 or Loctite® Natural Blue® with 4 litres of water. Keep this ready in a suitable container.
4. Measure out another 2.5 litres of water into a separate container.
5. Put the pump into green mode/standby mode. Refer to *Green mode/standby mode* on page 57.
6. Put the free end of the solvent suction pipe right down to the bottom of the container holding the 5 litres of solvent solution.
7. Using the PDT, press the Setup button to enter the setup menu and then select the Command menu. An access code is needed to enter the Command menu. Enter 202 when prompted.
8. Scroll down to the DP Clean menu and then press ENTER to select.
9. Select 'DP Clean On' to start the solvent flush procedure. The solvent solution will then gradually gets drawn into the pump.

10. Depending on the pump size, it typically takes around 4-7 minutes to draw through the 5 litres of the solvent solution (larger pumps draw the liquid through more quickly than the smaller pumps). Once the full 5 litres of the solvent solution have been drawn through, put the free end of the solvent suction pipe right down to the bottom of the container holding the 2.5 litres of water. The water will flush through any solvent solution remaining in the pump mechanism.
11. The pump typically takes another 2-4 minutes to draw through the water. Once all the water has been drawn into the pump, the DP clean process continues with a purge cycle, drawing air or purge gas into the pump to dry out the mechanism for the rest of the clean time.

Notes:

1. If monitoring the state of the solvent that exits the pump to determine whether the pump is clean, take special care because the solvent solution initially exits the pump as steam and then as hot liquid with typical temperature of 75 °C.

2. The exhausted liquid will never run clear. The exhausted liquid from a clean pump has a similar viscosity to water (not thick and viscous) and is a light rust colour when seen exiting the exhaust.

3. Depending on the application, the solvent flush process may need to be repeated. Contact us for advice.

4. If the pump takes an abnormally long time to draw in fluids, there may be a problem with the high flow purge and solvent flush kit. A blocked orifice or leaks in the solvent suction pipe or pneumatic gas line are the most likely causes. Investigate the problem and rectify before continuing to use the solvent flush procedure. If in doubt, contact us.

Once the DP clean time has elapsed, the dry pumping system will return to green mode/ standby mode settings. The pump can then be put back on-process.

To stop the solvent flush process while it is running, enter the DP Clean menu again using the PDT and select 'DP Clean off'. The pneumatic valve will shut, stopping the flow of solvent into the pump. If DP Clean has been configured to run an inlet purge cycle after the clean cycle, sending a 'DP Clean off' command will initiate the purge cycle. To stop the purge cycle as well, the PDT must be used to select 'DP Clean off' for a second time.

The DP clean procedure can be configured to suit the user's application. Refer to *How to set up the DP clean* on page 141.

4.11 Pump speed control and PID

For some applications it is important to be able to adjust the speed of the pump while it is on-process, either to a set speed or to control the speed continuously to maintain a process pressure. The dry pumping system can run both the dry pump and booster at various speeds while on-process and it is possible to configure these speeds by a number of different methods. Refer to *How to control the pump speed* on page 144 for more information about how to set up speed control options.

The dry pumping system has a built-in Proportional-Integral-Derivative (PID) controller. When the PID function is enabled and the pump is on-process, the PID controller

continually adjusts the speed of the pump so that a user-determined pressure is maintained at the chosen pressure sensor.

For more information about enabling and setting up the PID controller, refer to *How to use the PID pressure control* on page 148.

5. Maintenance

WARNING:

Only personnel specially trained to perform electrical maintenance should attempt troubleshooting inside the electrical enclosures. These enclosures contain hazardous voltages and are not operator areas.

WARNING:

Leak test the dry pumping system after maintenance and seal any leaks found to prevent leakage of dangerous substances out of and leakage of air into the dry pumping system.

WARNING:

Wait for at least four minutes after switching off the electrical supply before touching any electrical component on the dry pumping system.

5.1 Safety and maintenance frequency

WARNING:

Obey the safety instructions given below and take the appropriate precautions. Failure to do so can cause injury to people and damage to equipment.

WARNING:

Electrical, purge gas and water supplies are all potentially hazardous energy sources. Before carrying out any maintenance the supply of these sources should be locked and tagged out.

WARNING:

Do not touch the pump exhaust and check-valve (if fitted) while the pump is running since the temperatures of these parts can cause burns. These parts will remain hot after the pump has stopped.

WARNING:

Personal protective equipment should be checked and used as specified by its supplier. Hazardous chemicals that have been pumped are located within the pumps and piping. Use of suitable protective gloves and clothing along with a respirator is recommended if contact with the substances is anticipated. Particular caution should be exercised when working with fluorinated materials which may have been exposed to temperatures greater than 260 °C. Refer to our safety datasheets for the detailed information.

- Ensure that the maintenance technician is familiar with the safety procedures which relate to the products pumped.
- Allow the pumps to cool to a safe temperature before fitting lifting eye bolts or starting maintenance work.
- Vent and purge the dry pumping system before starting any maintenance work.
- Isolate the dry pumping system and other components in the process system from the electrical supply so that they cannot be operated accidentally. Note that the emergency stop switch on the dry pumping system is not an electrical isolator.
- Wait for at least four minutes after switching off the electrical supply before touching any electrical component on the dry pumping system.
- Route and secure cables, hoses and pipelines during maintenance to avoid possible risk of trips or entrapment.
- The enclosure panels should only be removed when the dry pumping system has been switched off and allowed to cool sufficiently (as an indication the dry pumping system should be left for one hour with cooling water still connected with flow characteristics as defined in *Technical data* on page 15).
- Wear appropriate safety clothing when coming into contact with contaminated components. Dismantle and clean contaminated components inside a fume cupboard.
- If the cables between a motor and an inverter have been disconnected and refitted then the pump rotation should be checked.
- O-ring replacement intervals vary depending on the application.
- Dispose of the components, grease and oil safely.
- Take care to protect the sealing faces from damage.
- Do not touch or inhale the thermal breakdown products of fluorinated materials which may be present if the dry pumping system has been overheated to 260 °C and above. These breakdown products are very dangerous. Fluorinated materials in the dry pumping system include oils, greases and seals. The dry pumping system may have overheated if it was misused, if it malfunctioned or if it was in a fire. Our safety datasheets for the fluorinated materials used in the pump are available on request.

The dry pumping system requires little operator maintenance between overhauls. Pump protection sensors fitted to the dry pumping system do not require routine maintenance. The maintenance operations that can be carried out are described in the following sections. The frequency of maintenance operations depends on the process. Adjust the frequency of maintenance operations according to user experience.

When maintaining the dry pumping system, use replacement parts, seals and fittings supplied by us. Refer to *Service, spares and accessories* on page 76. Ensure that the purge gas and cooling water supplies are connected in parallel and that they meet the specifications given in *Technical data* on page 15. Contact us for more information.

Note:

If the pump is controlled by the MCM MicroTIM then all the configuration options for accessories and set sequences are stored in the MCM MicroTIM and not in the pump. This means that if a replacement pump is swapped in, it will be unnecessary to configure these options again if using the same MCM MicroTIM.

5.2 Relocate the dry pumping system for maintenance

WARNING:

The substances that accumulate in the exhaust pipe, elbow and check valve can be dangerous. Do not allow these substances to come into contact with skin or eyes. Do not inhale vapours from these substances. Fit blanking caps to the inlet and outlet flanges when moving the exhaust pipe, elbow or check valve around the workplace.

The majority of synthetic oils/grease can cause inflammation of the skin (dermatitis). Safety precautions must be taken to prevent prolonged skin contact with these substances. Use of suitable protective gloves and clothing along with a respirator is recommended if contact with the substance is anticipated. System process gases and residue can be highly toxic. Take all necessary precautions when handling components that have, or could have, come into contact with them, including O-rings, lubricants and all exhaust accessories.

WARNING:

Suitable lifting equipment must be used to move the dry pumping system. It is too heavy to lift by hand.

WARNING:

Remove bulky accessories such as inlet filters, silencers and knock out pots before moving the dry pumping system because they can make the dry pumping system unstable. Do not exceed the topple angle of 10° when moving the pump.

CAUTION:

Drain the cooling water from the dry pumping system if transporting or storing it in conditions where the cooling water could freeze. Failure to do so could result in the cooling water freezing in the dry pumping system and damage occurring to the pumps and/or the cooling water pipelines.

To remove the dry pumping system from its operating location and move it to another location to carry out maintenance, use the following procedure:

1. Purge the dry pumping system and shutdown as described in *Operation* on page 54 and allow the dry pumping system to cool down.
2. Isolate the power and then disconnect the mating half from the electrical supply connector, then isolate the water and the gas purge supply.
3. Disconnect the purge gas supply, taking care as any trapped gas under pressure is released. Disconnect the cooling water supply followed by the cooling water return.
4. Disconnect the inlet and outlet from the vacuum and exhaust systems, remove bulky accessories such as filters, silencers and knock out pots and then fit the blanking caps.
5. If necessary, disconnect any other accessories from the dry pumping system.

6. For dry pumping systems with castors, adjust the levelling feet so that the dry pumping system rests on the castors.
7. Move the dry pumping system to the location where maintenance will be carried out.

After maintenance is complete, re-install the dry pumping system as described in *Installation* on page 28.

5.3 Draining the cooling water

WARNING:

Use of suitable protective gloves and eye protection is recommended when carrying out this procedure. Personal protective equipments should be checked and used as specified by its supplier.

1. Relocate the dry pumping system for maintenance as stated in *Relocate the dry pumping system for maintenance* on page 69.
2. Connect a regulated clean dry air supply (5 barg or 73 psig) to the cooling water supply connection (*Figure: The controls/connectors on the rear of the pump (system with rear exhaust and castors/levelling feet fitted*, item 14). Do not turn on the air supply yet.
3. Connect a drain hose to the cooling water return connection (*Figure: The controls/connectors on the rear of the pump (system with rear exhaust and castors/levelling feet fitted)*, item 17). Position the open end of the drain hose in a suitable collection container.
4. Turn on the clean dry air supply.
5. Monitor the drain hose outlet until no further cooling water is purged.
6. Fit the external EMS link plug (supplied) to the EMS connection on the rear of the dry pumping system (*Figure: The controls/connectors on the rear of the pump (system with rear exhaust and castors/levelling feet fitted*, item 22). Failure to do so will result in not being able to purge the water system effectively.
7. Connect the dry pumping system to a suitable mains electrical supply. The control system will now open each temperature control valve, purging the cooling water from all flow paths. After two minutes, remove the electrical supply. Wait for 10 seconds and then re-connect the electrical supply and repeat the entire process. Continue repeating until no further cooling water is purged from the dry pumping system.
8. The cooling water drain procedure is now complete. Disconnect the air supply, electrical supply and the drain hoses. Dispose of the drained cooling water appropriately.

5.4 General maintenance

CAUTION:

Do not use cleaning materials based on strong alkalis, aggressive or chlorinated solvents. Do not use cleaning materials containing abrasives.

The following maintenance can be carried out on the dry pumping system between the overhauls. Contact us for the details and training:

- Check the oil level. Refer to *Checking the oil levels and refilling* on page 71.
- Inspect the connections, pipelines, cables and fittings. Refer to *Inspect the connections, pipelines, cables and fittings* on page 72.
- Inspect and clean the exhaust pipe, elbow and check valve.

5.4.1 Checking the oil levels and refilling

WARNING:

The use of suitable protective gloves and eye protection is recommended when carrying out this procedure. Personal protective equipments should be checked and used as specified by its supplier.

CAUTION:

Ensure that the oil levels in the dry pump and the mechanical booster pump (where applicable) are correct. If a pump oil level is incorrect, pump performance may be affected and the pump may be damaged.

The dry pump and booster (if fitted) each have two sight glasses. One is located on the end cover (refer to *Figure: Location of the oil sight glass and the fill plug on end cover*) and the other is located on the gearbox (refer to *Figure: Location of the oil sight glass and the fill plug on gearbox*). Note that the GXS750 dry pumping system has a gearbox with a sight glass at each end and so *Figure: Location of the oil sight glass and the fill plug on gearbox* applies to both ends. One is accessible from the left side of the dry pumping system and the other is accessible from the right side.

The GXS 450, 450/2600, 450/4200, 750, 750/2600 and 750/4200 dry pumping systems are provided with slots in the side panels to enable the oil levels to be checked without removal of the side panels. To check oil levels on these systems:

1. Switch off the dry pumping system and allow it to stand for at least 5 minutes.
2. Check that the oil level is in line with the MAX indicator. If the oil level is below the maximum it must be topped up.

All other GXS pumps require the dry pumping system side panels to be removed in order to check the oil level. To check oil levels on these systems:

1. Switch off the dry pumping system and allow it to stand for at least 5 minutes.
2. Remove the side panels.
3. Check that the oil level is in line with the MAX indicator. If the oil level is below the maximum it must be topped up.

To top up the oil levels, all GXS pumping systems require side panels to be removed:

1. Refer to *Figure: Location of the oil sight glass and the fill plug on end cover* and *Figure: Location of the oil sight glass and the fill plug on gearbox* to locate the oil fill plugs on the top of the end cover and gearbox.
2. Remove the appropriate oil fill plug and carefully top up with oil. Refer to *General technical data* on page 15 for specification.

3. Keep adding oil until the oil level is in line with the MAX indicator.
4. Refit the oil fill plug.
5. Refit all dry pumping system side panels.

Figure 14 Location of the oil sight glass and the fill plug on end cover

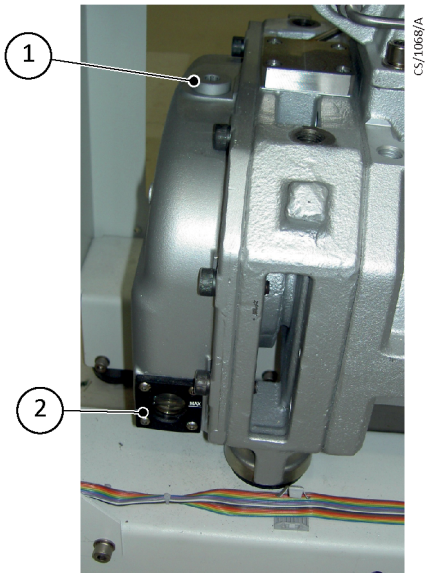

1. Oil filler plug
2. Oil sight glass

Figure 15 Location of the oil sight glass and the fill plug on gearbox

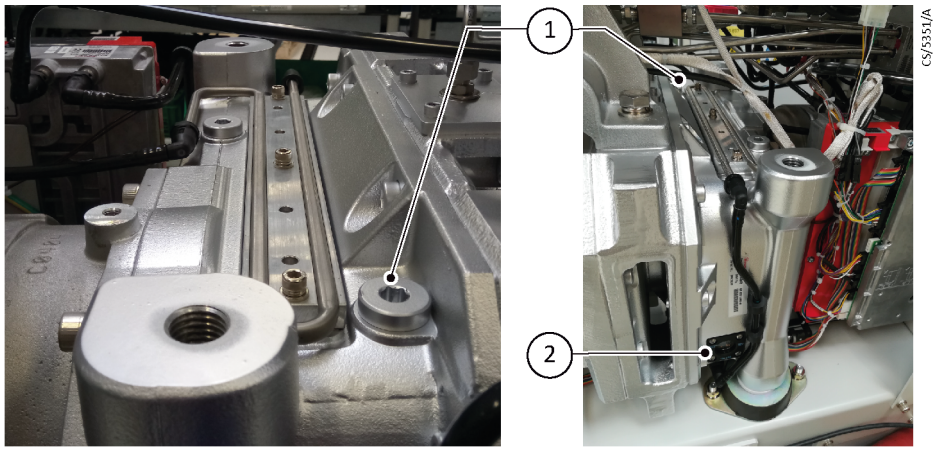

1. Oil filler plug
2. Oil sight glass

If the oil is very old or has light contamination then it is possible to replace the oil, contact us for more information.

5.4.2 Inspect the connections, pipelines, cables and fittings

Depending on the application, inspection and cleaning of the exhaust pipe and any elbows or check valves fitted may be needed. Contact us for details and training. If the dry pumping system is not relocated for maintenance, ensure that all supplies are locked out and tagged out before starting the following procedure.

1. Remove the enclosure side and top panels.

2. Check that all the connections are secure, tighten any loose connections. Inspect all cables, pipelines, hoses and connections and check that they are not corroded or damaged and do not leak, repair or replace any pipelines, hoses and connections that are corroded or damaged, or which leak.
3. Refit the enclosure side and top panels.

For the areas with hard water or sites with the poor cooling water quality it may be necessary to clean the cooling water pipes to prevent blockages and reductions in cooling efficiency. The equipment and chemicals for pipe cleaning are commercially available. Contact us for more information.

5.5 Overhaul

WARNING:

Do not attempt to overhaul the pump without our training and tooling.

We provide a full range of overhaul options worldwide. We can provide training, tooling and spares to enable the users to overhaul their pumping systems. Contact us for more information.

6. Transportation, storage and disposal

6.1 Transportation

WARNING:

Do not drain the oil from the pumps whether dangerous substances have been pumped or not. Blanking plates must be fitted to seal all vacuum inlet and outlet ports (to prevent possible oil leakage). Ensure that the dry pumping system is correctly labelled, if in doubt, contact us.

Follow the procedure laid out in *Storage* on page 74 and then read form HS1 and fill out form HS2, which can be found at the back of this manual.

6.2 Storage

Drain the cooling water from the dry pumping system. If transporting or storing it in conditions where the cooling water could freeze, refer to *Draining the cooling water* on page 70. Failure to observe the instructions could result in the cooling water freezing in the dry pumping system and damage to the pumps and/or the cooling water pipelines.

Store the dry pumping system as follows:

1. Follow the procedure set out in *Relocate the dry pumping system for maintenance* on page 69.
2. Store the dry pumping system in clean dry conditions until required.
3. If the pump is to be stored for longer than six weeks, it must be manually rotated every 14 days or less. Contact us for details.
4. When required for use, prepare and install the dry pumping system as described in *Installation* on page 28 of this manual.

6.3 Disposal

WARNING:

Dispose of the dry pumping system and any components safely and in accordance with all local and national safety and environmental requirements.

This equipment may contain a lithium manganese dioxide battery which, under California law, requires notification for the presence of perchlorate: Perchlorate Material - special handling may apply, refer to www.dtsc.ca.gov/hazardouswaste/perchlorate/

Our products are supported by a worldwide network of our service centres. Each service centre offers a wide range of options including disposal. Refer to *Service* on page 76 for more information.

Pump system materials suitable for recycling include cast SG iron, steel, PTFE, stainless steel, brass, aluminium, zinc alloy, nickel, mild steel, ABS and polyamide.

Take particular care with the following:

- Fluoroelastomers which may have decomposed as the result of being subjected to high temperatures.
- Components which have been contaminated with dangerous process substances.
- Lithium battery.

7. Service, spares and accessories

7.1 Introduction

WARNING:

When returning the dry pumping system to our service centre or our other company, the requirements of *Service, spares and accessories* on page 76 and *Return the equipment or components for service* on page 76 must be complied with.

Note:

The oil must not be drained from the dry pumping system. It must be clearly stated that the pump is full of oil when completing the HS2 form.

Our products, spares and accessories are available from our companies and distributors worldwide. These centres employ service engineers who have undergone our comprehensive training courses. Order the spare parts and accessories from our nearest company or distributor. When ordering, please state for each part required:

1. Model and item number of the equipment.
2. Serial number (if any).
3. Item number and description of the part.

7.2 Service

Our products are supported by a worldwide network of our service centres and distributors. Each service centre offers a wide range of options including:

- equipment decontamination
- service exchange
- repair
- rebuild
- testing to factory specifications.

The equipment that has been serviced, repaired or rebuilt is returned with a full warranty. The local service centre can also provide our engineers to support the on-site maintenance, service or repair of the equipment. For more information about service options, contact our nearest service centre or company.

We can provide training, tooling and spares to enable the users to overhaul their dry pumping systems.

Remove pump accessories before returning the dry pumping system for service.

7.2.1 Return the equipment or components for service

Before you send your equipment to us for service or for any other reason, you must send us a completed Declaration of Contamination of Vacuum Equipment and Components – Form HS2. The HS2 form tells us if any substances found in the equipment are hazardous, which is important for the safety of our employees and all other people

involved in the service of your equipment. The hazard information also lets us select the correct procedures to service your equipment.

We provide instructions for completing the form in the Declaration of Contamination of Vacuum equipment and Components – Procedure HS1.

If you are returning a vacuum pump, note the following:

- If a pump is configured to suit the application, make a record of the configuration before returning the pump. All replacement pumps will be supplied with default factory settings.
- Do not return a pump with accessories fitted. Remove all accessories and retain them for future use.
- The instruction in the returns procedure to drain all fluids does not apply to the lubricant in pump oil reservoirs.

Download the latest documents from *www.edwardsvacuum.com/HSForms/*, follow the procedure in HS1, fill in the electronic HS2 form, print it, sign it, and return the signed copy to us.

NOTICE:

If we do not receive a completed HS2 form, your equipment cannot be serviced.

7.3 Accessories

Table 26 Accessories

Description	Item Number
Exhaust check valve kit NW40 for GXS160 and 250 systems Exhaust check valve kit NW50 for GXS450 and 750 systems	A50782000 A50790000
Water flow monitoring kit* Flow monitor 0 - 60 slm Flow monitor 0 - 200 slm	A50783000 A60027043 A60027044
Nitrogen flow switches: Suitable for 0 - 60 slm Suitable for 0 - 204 slm	 A50633000 A50634000
External Evacuation System (EES) kits: Suitable for GXS 160/1750** Suitable for GXS with 2600 booster** Suitable for GXS with 4200 booster**	 M58825019 M58935019 M59845019
Booster purge kits: Suitable for GXS with 1750 or 2600 booster Suitable for GXS with 4200 booster	 M56425030 M59845023
PDT	D37280700
MCM MicroTIM Connector kit for the MCM MicroTIM Virtual Display Terminal (VPDT)	D37360320 D37422802 D37488500
Accessory modules:	

Description	Item Number
Active Accessory Module (AAM)† Passive Accessory Module (PAM)† GXS AAM/PAM bracket kit†	D37480500 D37480550 M58800041
Electrical connector mating part:	
Suitable for 380-460 V systems using the Harting Han® 100 A axial screw module mains connector	D37482833
Suitable for 200-230 V systems using the Harting Han® 100 A axial screw module mains connector	D37481833
Suitable for all systems using the Harting Han® K4/4 mains connector	D37480833
Suitable for 200 - 230 V systems using the Harting Han® 200 A axial screw module mains connector (combination systems)	D37485835
Suitable for 200 - 230 V systems using the Harting Han® 200 A axial screw module mains connector (pump-only systems)	D37485836
Water inlet strainer 3/8" BSP	A22304346
Water inlet strainer 1/2" BSP	A22304380
Adaptor cable 5 way XLR to 9 way D type, 2 m long	D37370754
Profibus module kit	D39753000
Pressure indicator assembly	M58808141
Pressure Transducer Assembly (ASG)	M58808152
Temperature transmitter, pump only	M58808160
Temperature transmitter, combinations	M58828160
GXS auxiliary gauge cable (0 - 10 V)	D37241017
GXS pressure input cable (4 - 20 mA) Connector kit for 4 - 20 mA cable	D37241019 D37241023
Inlet isolation valve (with position indicator)	Contact Edwards
Inlet spool	Contact Edwards
Inlet filter	Contact Edwards
Inlet knock-out pot	Contact Edwards
Exhaust knock-out pot	Contact Edwards
Cleanable, drainable silencer	Contact Edwards
Instrument pack (PT100 and ASG + cables)	Contact Edwards

** Only suitable for the GXS160 and GXS250 dry pumping system.*

*** Only suitable for the pump booster combinations used for the loadlock applications.*

† AAM includes PAM. Note that the GXS AAM/PAM bracket kit is required to fit AAM/PAM to the pump.

Note:

For the GXS750, GXS70/2600 and GXS750/4200 systems operating at a high voltage: If a cable size more than 25 mm^2 (4 AWG) is necessary as per the local standards, the LV kit (D37481833) permits the cable sizes up to 35 mm^2 (2 AWG).

7.4 Spares

Table 27 Spares

Spare	Item Number
Drynert 25/6 lubricant: 1 kg (529 ml) 5 kg (2646 ml)	 H11312021 H11312025

For information about all other spares, refer to the customer parts manual M58840845.

8. Installation drawings

8.1 GXS160

Figure 16 GXS160 installation drawing (Sheet 1)

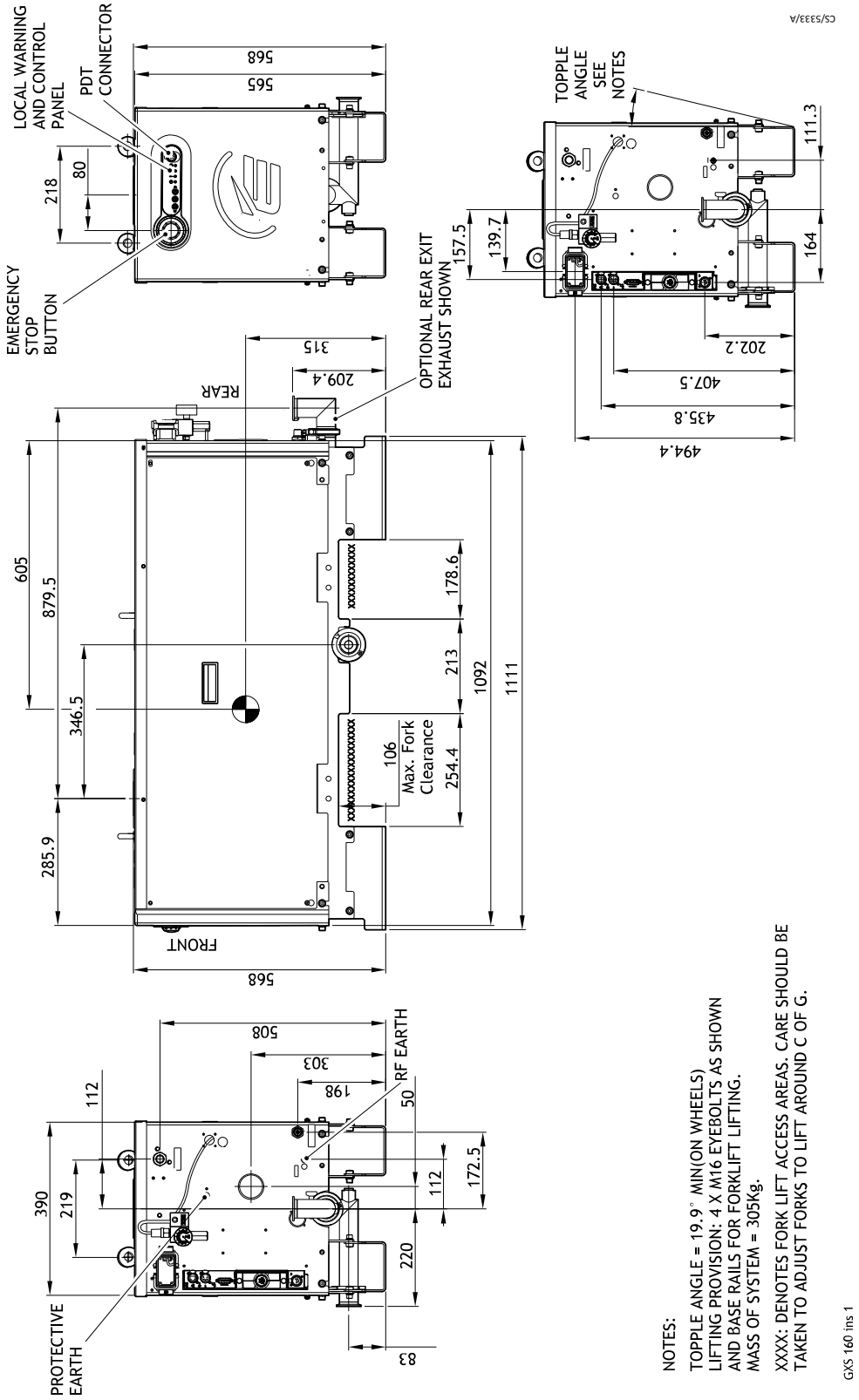

Figure 17 GXS160 installation drawing (Sheet 2)

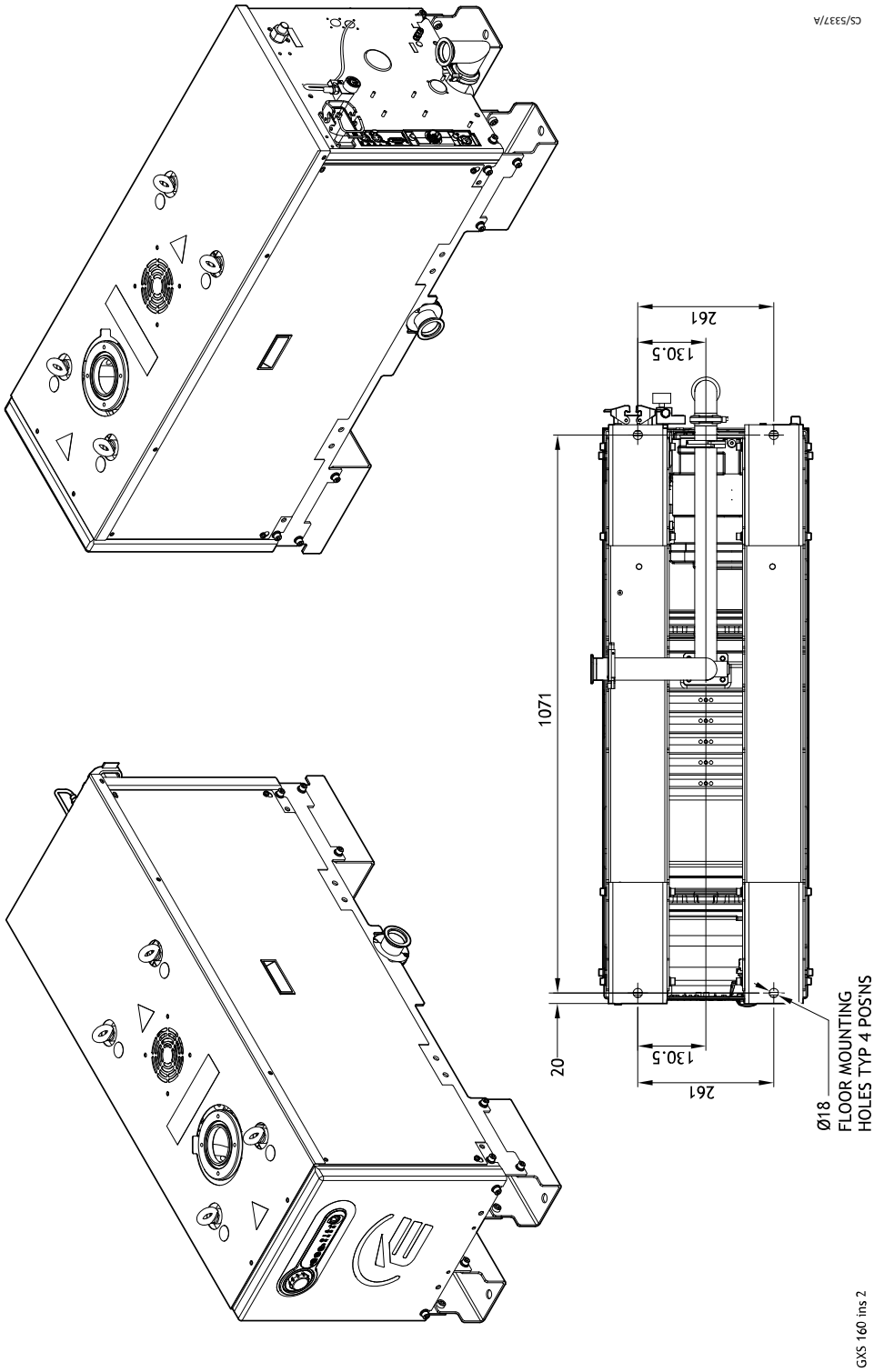

Figure 18 GXS160 installation drawing (Sheet 3)

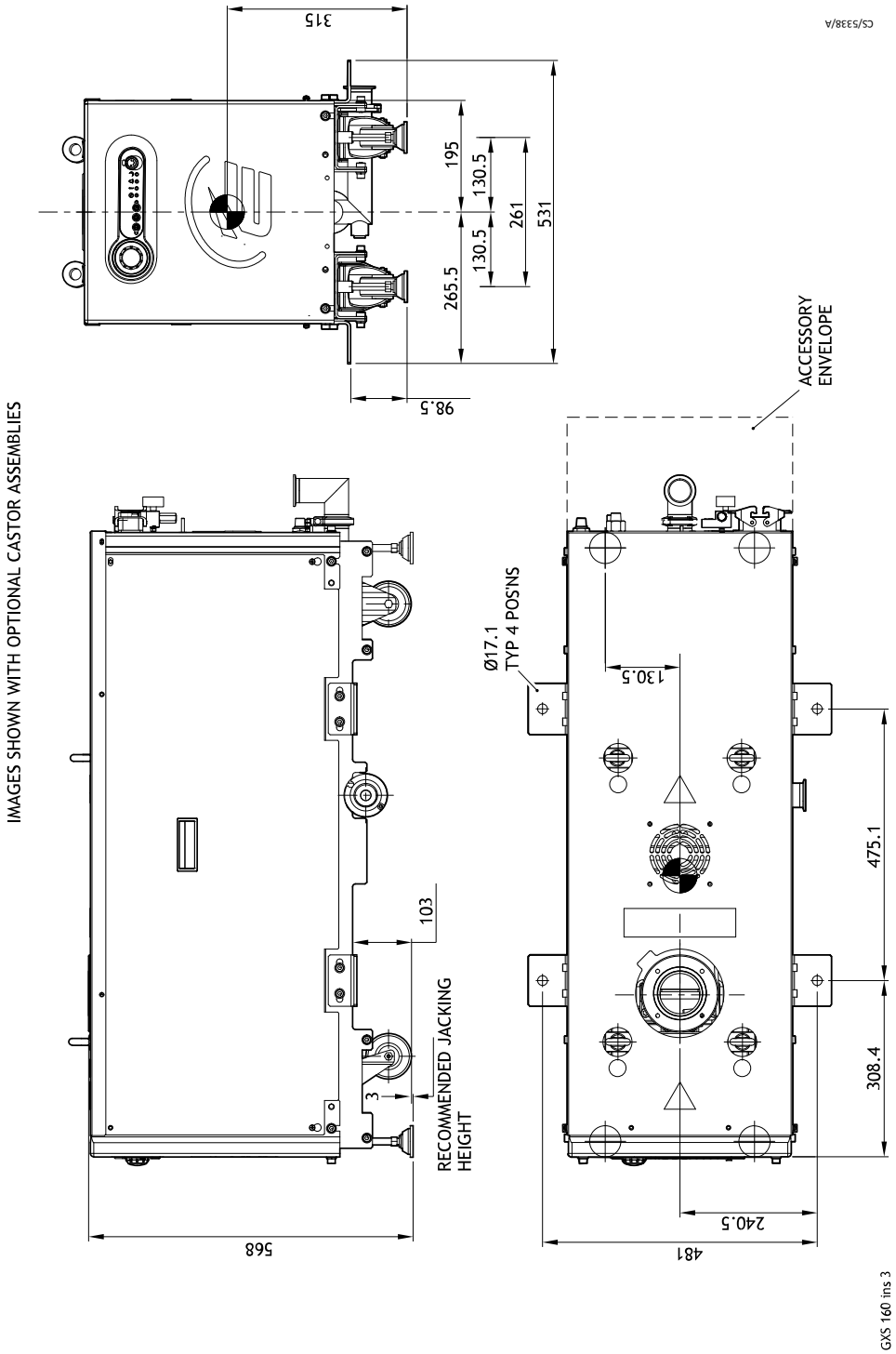

Figure 19 GXS160 installation drawing (Sheet 4)

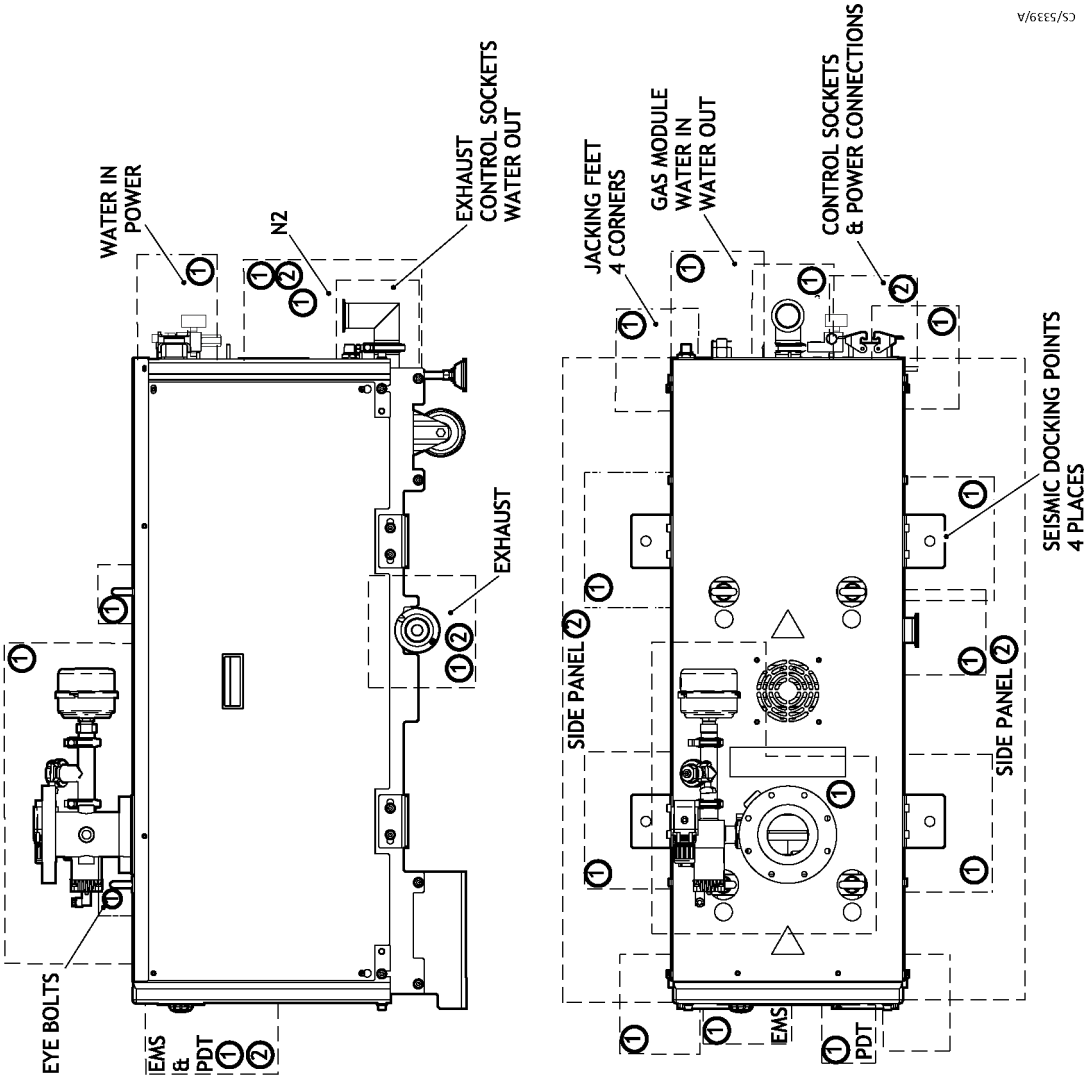

VIEWS SHOWN WITH ALL STANDARD ACCESSORIES THAT PROTRUDE OUTSIDE OF THE GENERAL PUMP ENVELOPE AND THESE ARE REPRESENTED IN DASHED LINES.
CASTOR ASSEMBLY SHOWN AT REAT AND FLOOR MOUNT PLATES SHOWN AT THE FRONT TO DISPLAY BOTH OPTIONS

NOTES:
ACCESS SHOWN AS GUIDANCE ONLY.

① RECOMMENDED ACCESS

② RECOMMENDED SERVICE ACCESS

GXS 160 ins 4

8.2 GXS160/1750

Figure 20 GXS160/1750 installation drawing (Sheet 1)

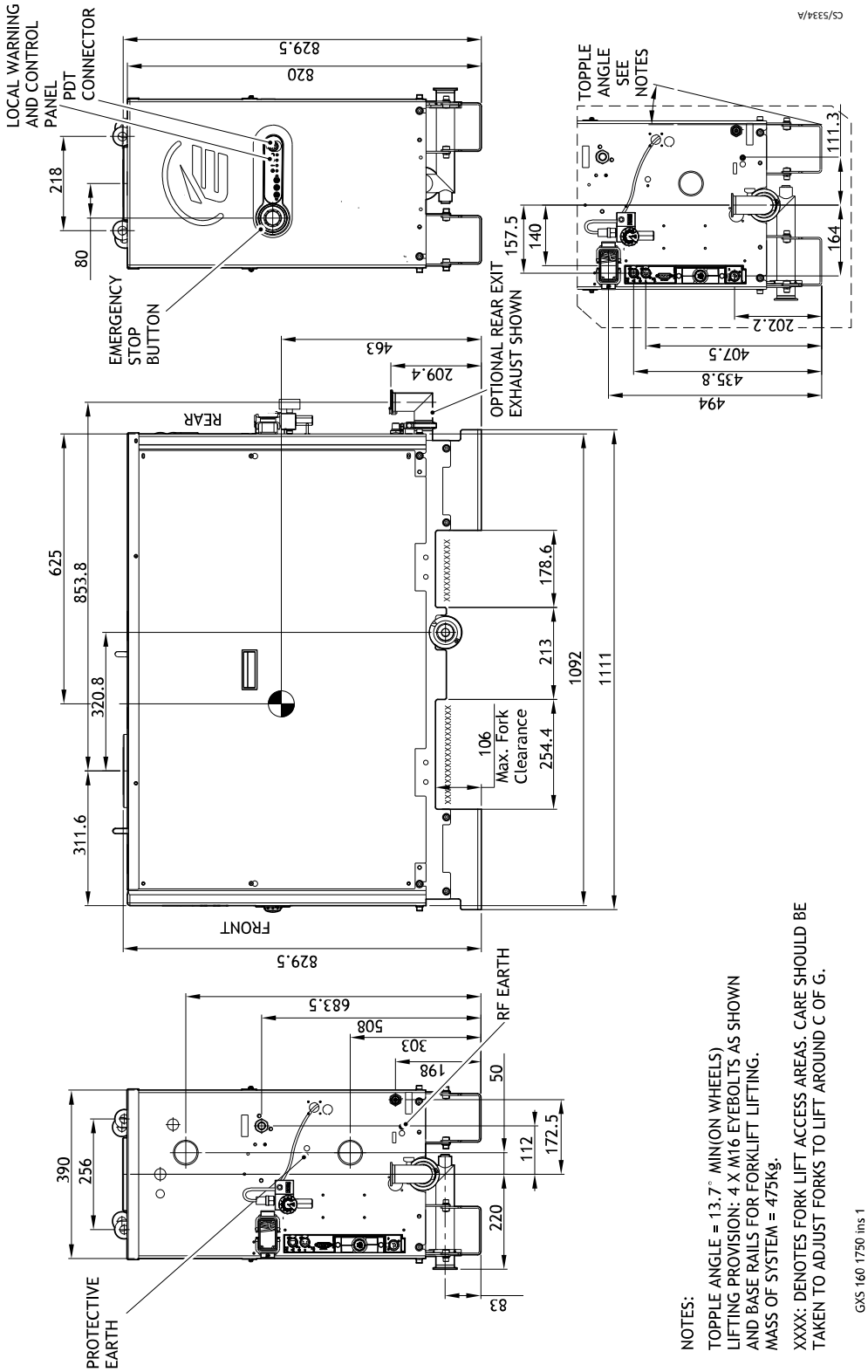

Figure 21 GXS160/1750 installation drawing (Sheet 2)

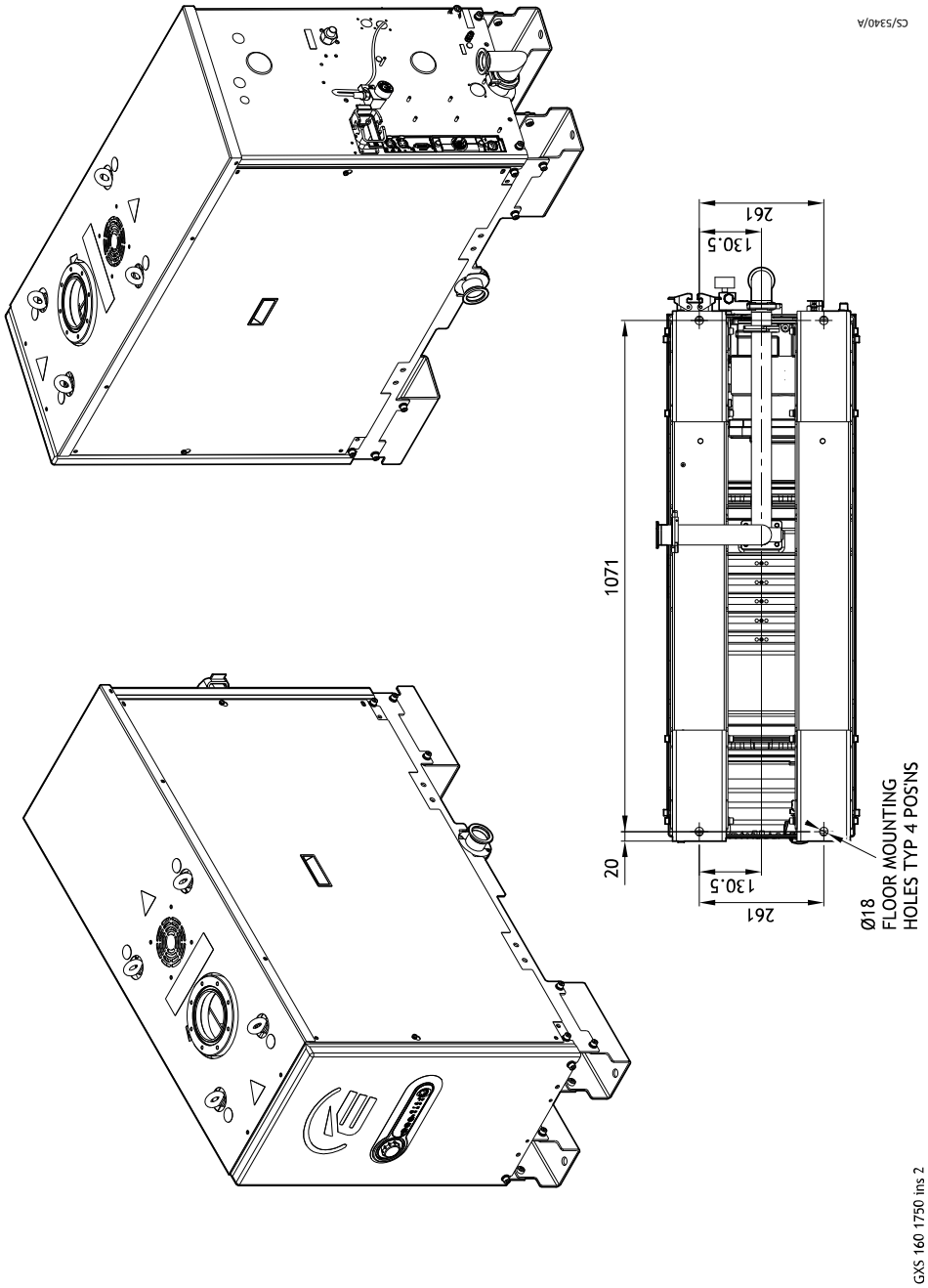

Figure 22 GXS160/1750 installation drawing (Sheet 3)

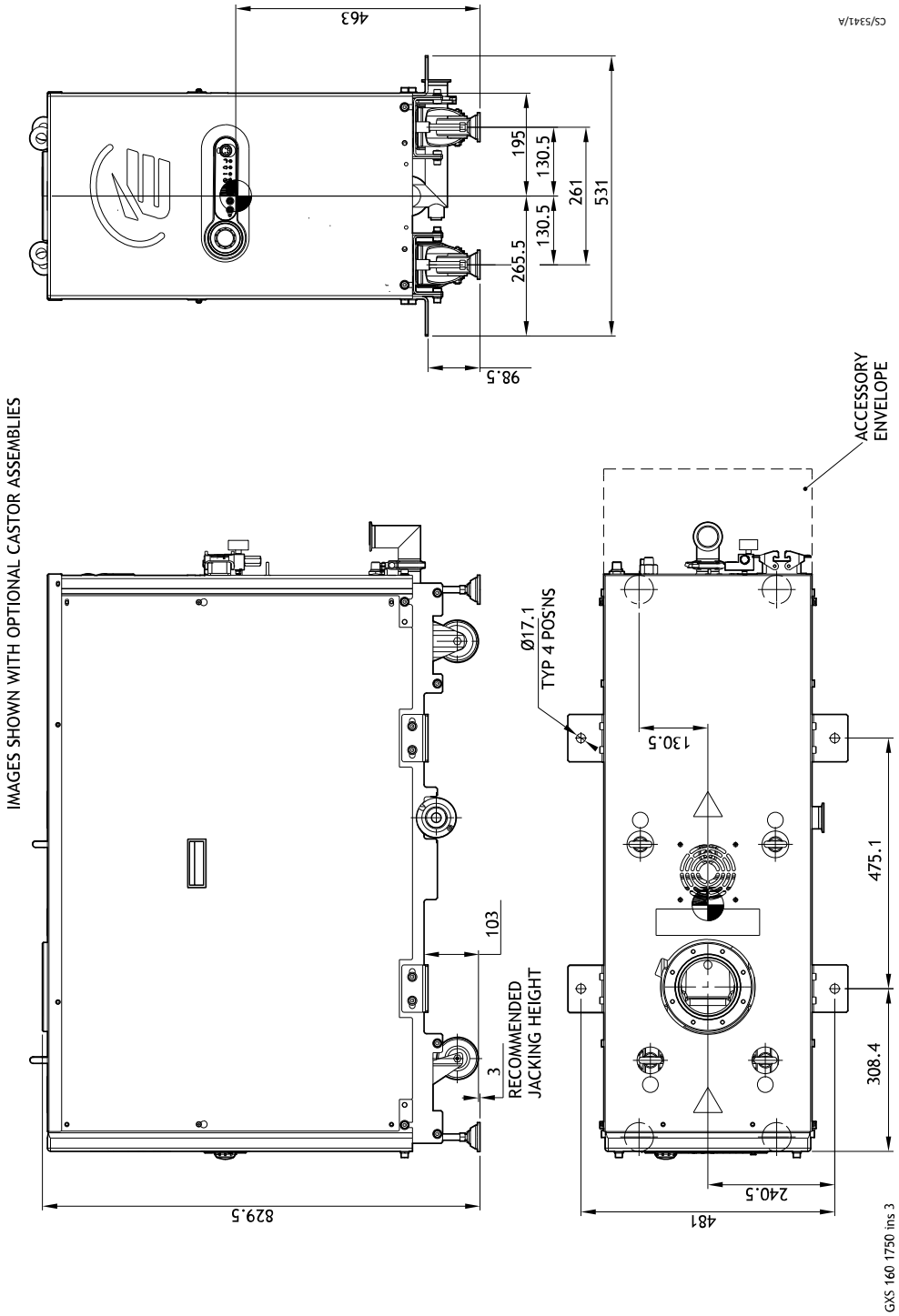

Figure 23 GXS160/1750 installation drawing (Sheet 4)

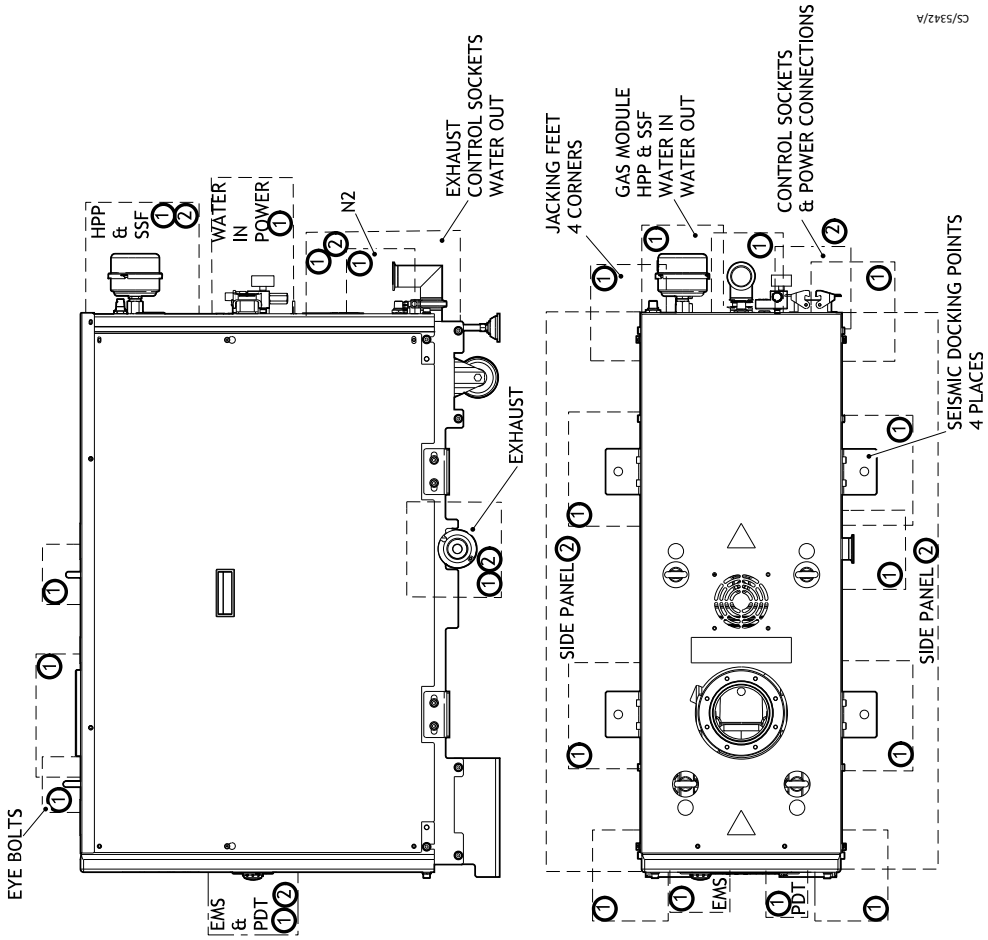

VIEWS SHOWN WITH ALL STANDARD ACCESSORIES THAT PROTRUDE OUTSIDE OF THE GENERAL PUMP ENVELOPE AND THESE ARE REPRESENTED IN DASHED LINES.
CASTOR ASSEMBLY SHOWN AT REAT AND FLOOR MOUNT PLATES SHOWN AT THE FRONT TO DISPLAY BOTH OPTIONS

NOTES:
ACCESS SHOWN AS GUIDANCE ONLY.

1 RECOMMENDED ACCESS

2 RECOMMENDED SERVICE ACCESS

GXS 160 1750 ins 4

8.3 GXS250

Figure 24 GXS250 installation drawing (Sheet 1)

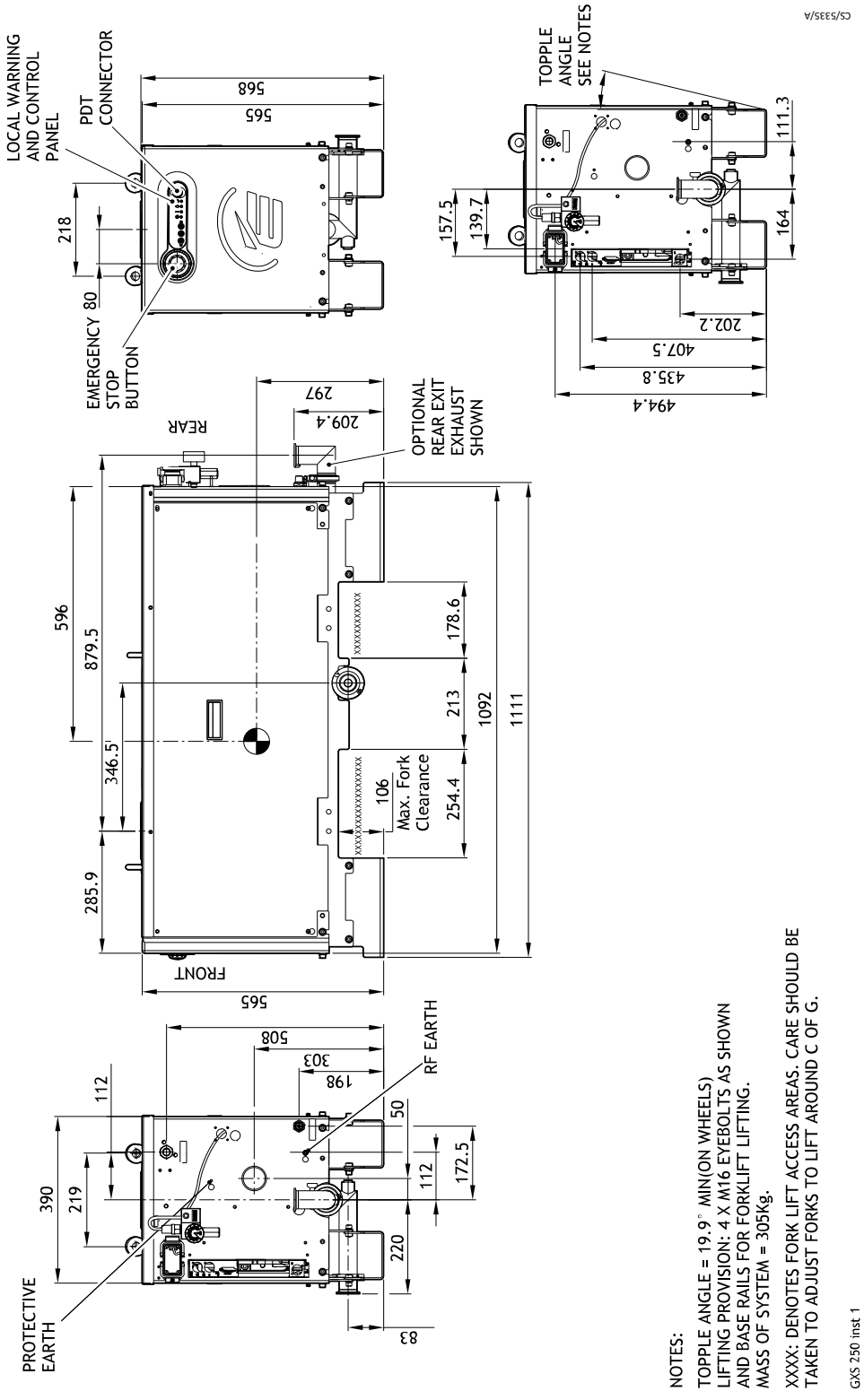

Figure 25 GXS250 installation drawing (Sheet 2)

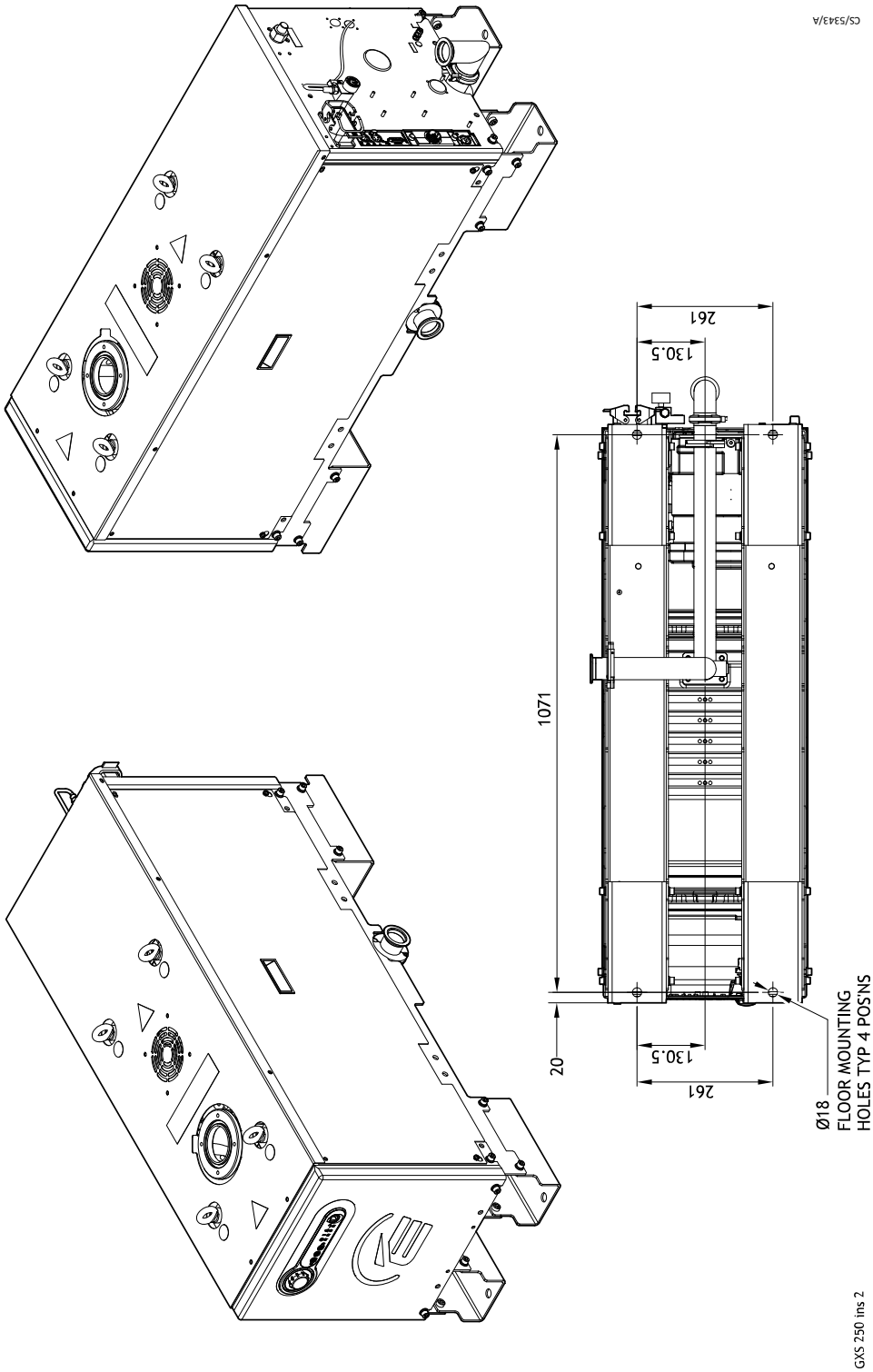

Figure 26 GXS250 installation drawing (Sheet 3)

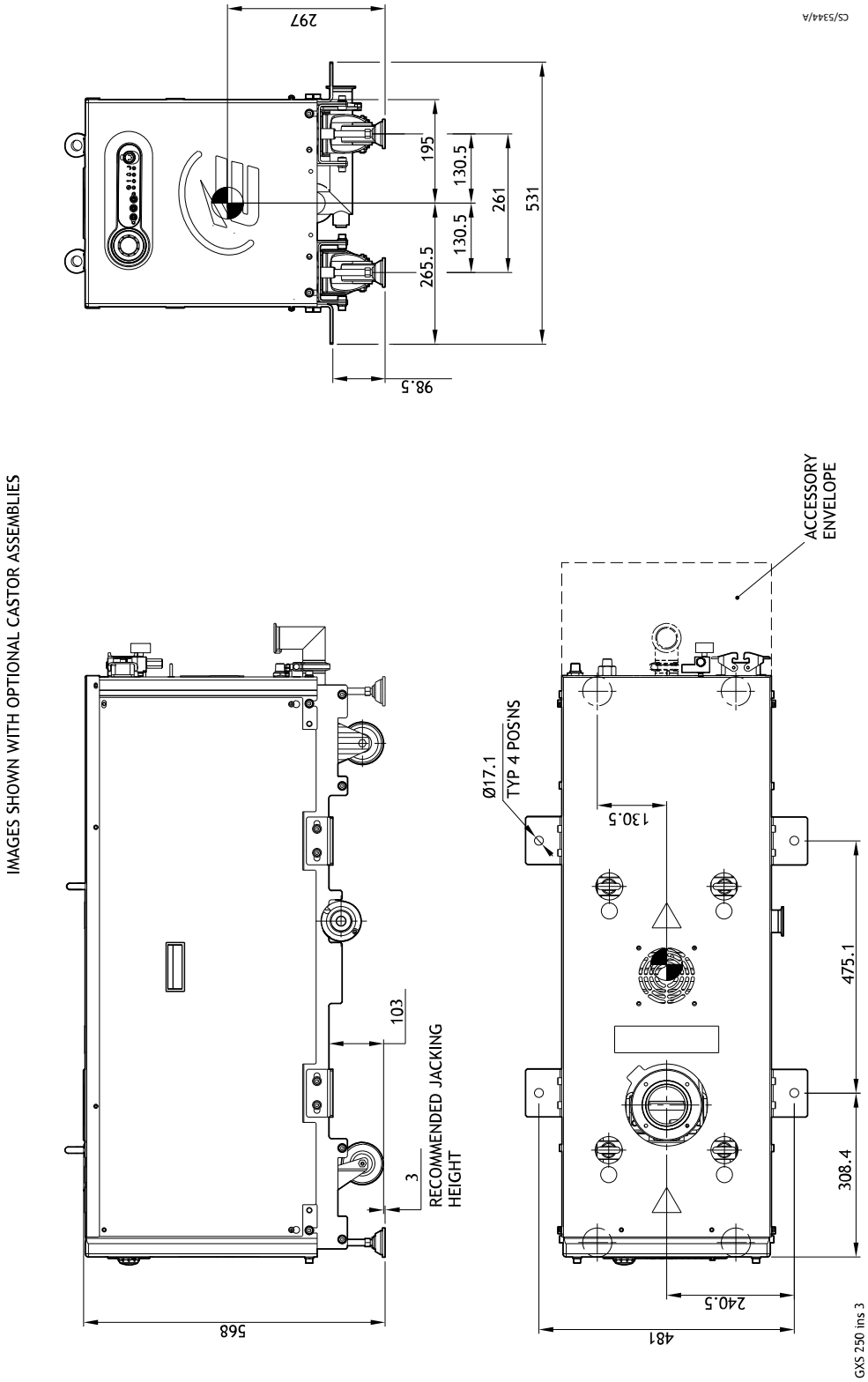

Figure 27 GXS250 installation drawing (Sheet 4)

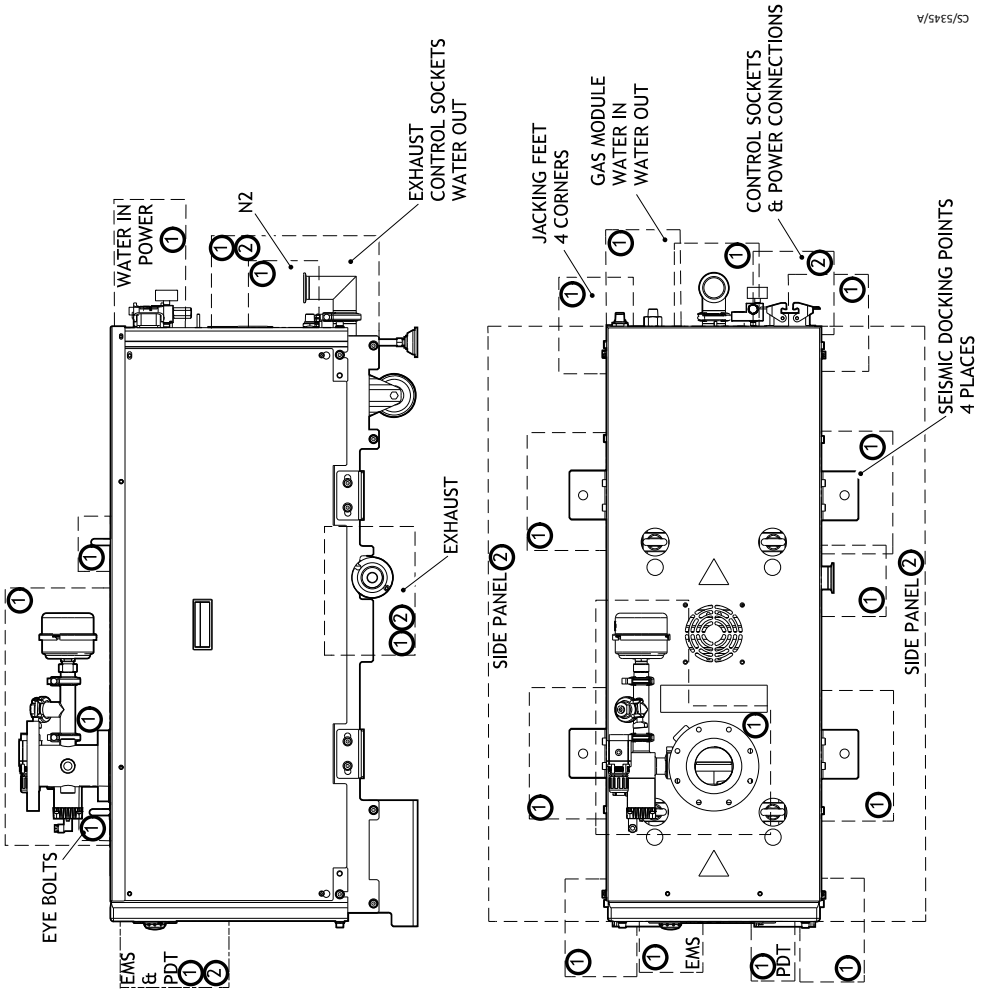

VIEWS SHOWN WITH ALL STANDARD ACCESSORIES THAT PROTRUDE OUTSIDE OF THE GENERAL PUMP ENVELOPE AND THESE ARE REPRESENTED IN DASHED LINES.
CASTOR ASSEMBLY SHOWN AT REAT AND FLOOR MOUNT PLATES SHOWN AT THE FRONT TO DISPLAY BOTH OPTIONS

NOTES:
ACCESS SHOWN AS GUIDANCE ONLY.

1 RECOMMENDED ACCESS

2 RECOMMENDED SERVICE ACCESS

GXS 250 ins 4

8.4 GXS250/2600

Figure 28 GXS250/2600 installation drawing (Sheet 1)

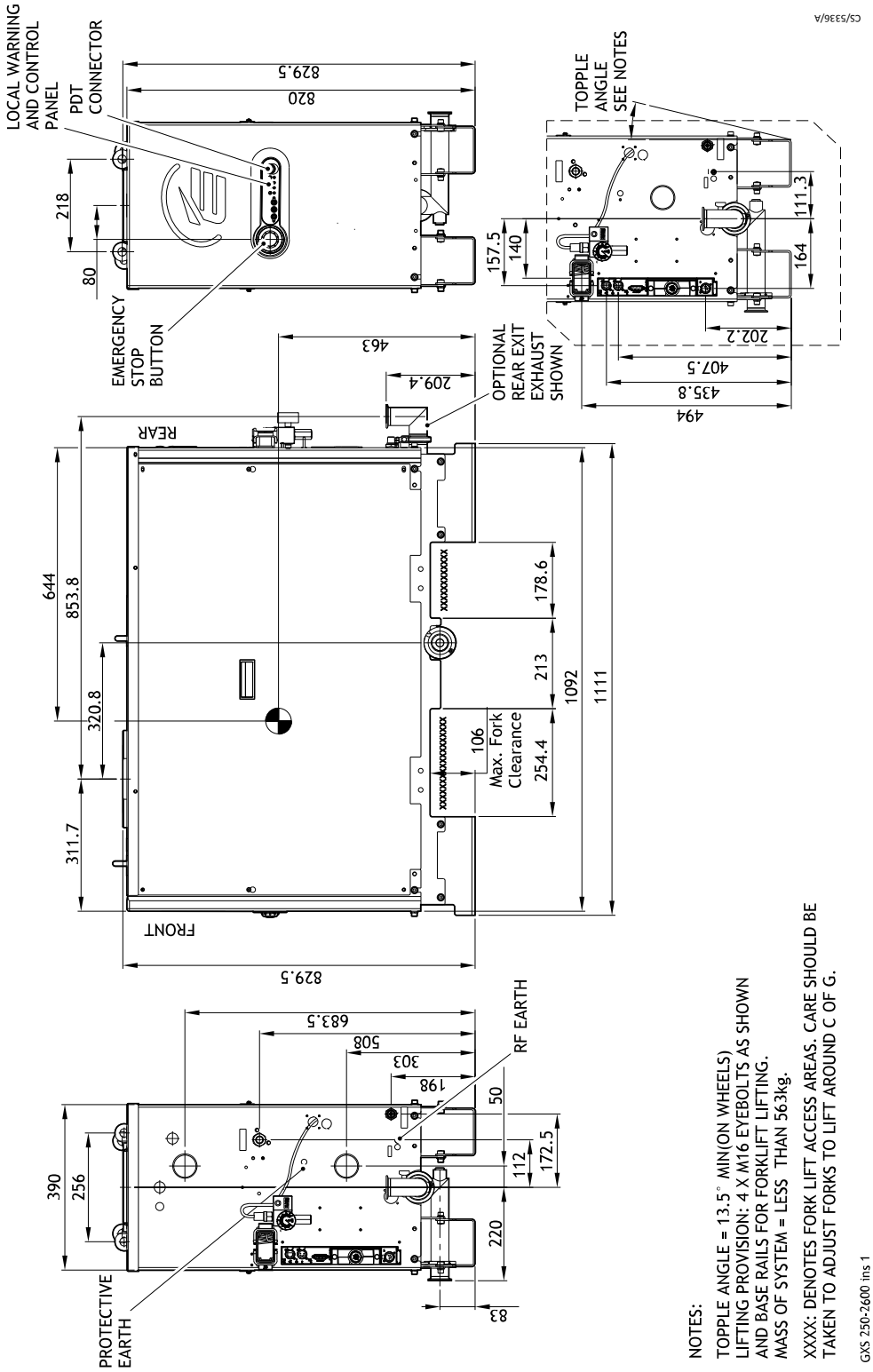

Figure 29 GXS250/2600 installation drawing (Sheet 2)

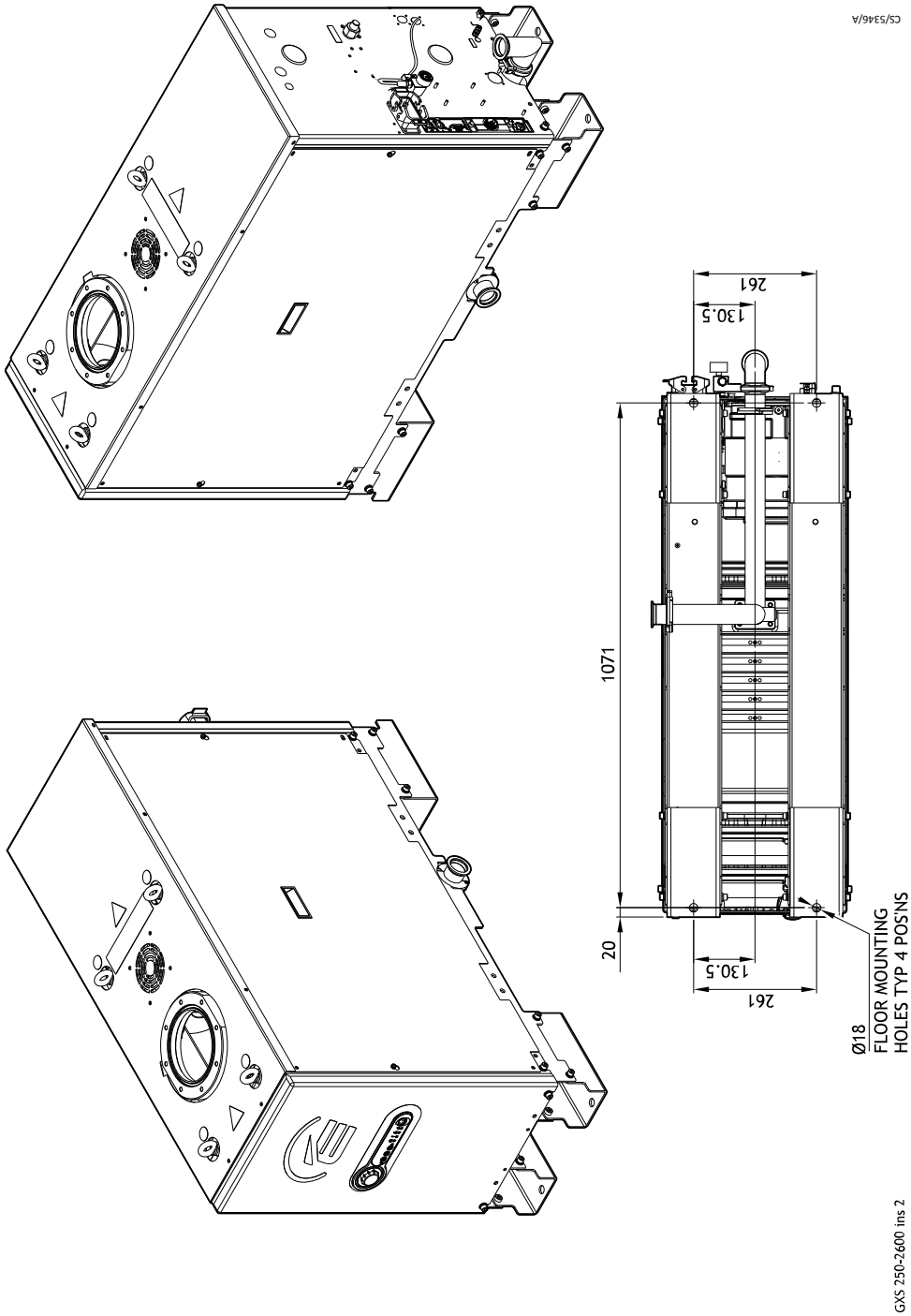

Figure 30 GXS250/2600 installation drawing (Sheet 3)

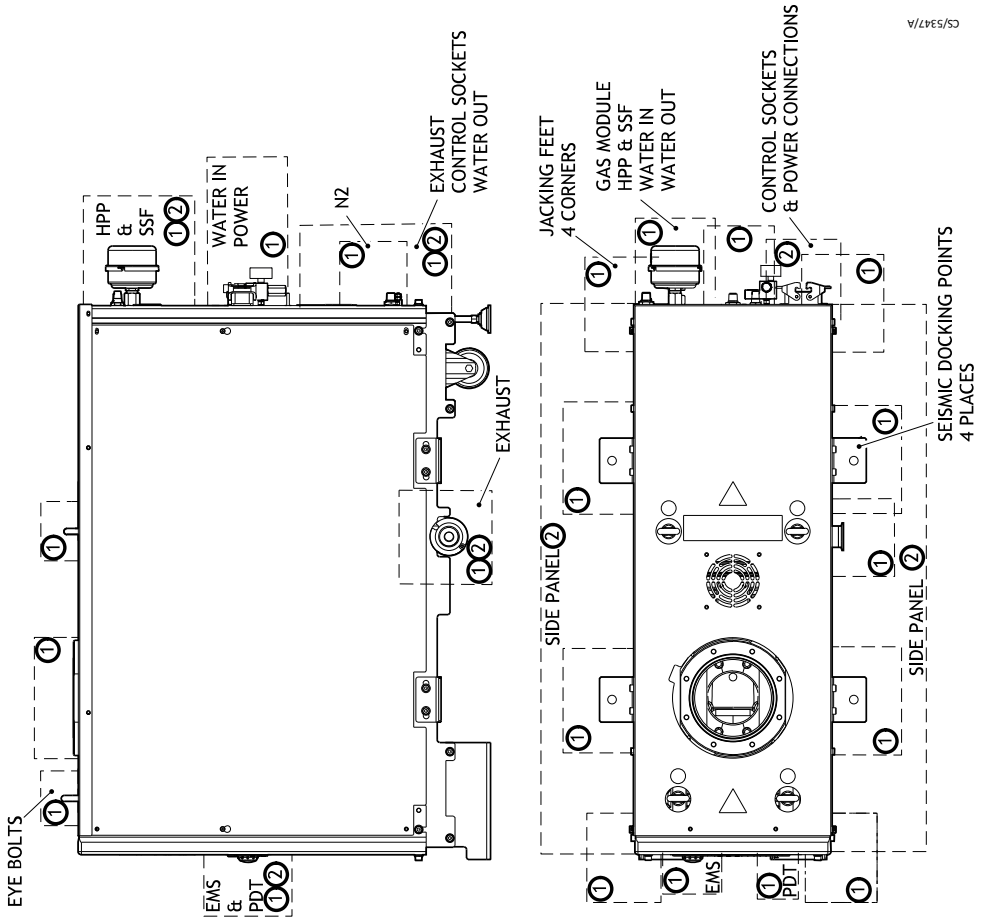

VIEWS SHOWN WITH ALL STANDARD ACCESSORIES THAT PROTRUDE OUTSIDE OF THE GENERAL PUMP ENVELOPE AND THESE ARE REPRESENTED IN DASHED LINES.
CASTOR ASSEMBLY SHOWN AT REAT AND FLOOR MOUNT PLATES SHOWN AT THE FRONT TO DISPLAY BOTH OPTIONS.

NOTES:
ACCESS SHOWN AS GUIDANCE ONLY.

1 RECOMMENDED ACCESS

2 RECOMMENDED SERVICE ACCESS

GXS 250-2600 ins 4

Figure 31 GXS250/2600 installation drawing (Sheet 4)

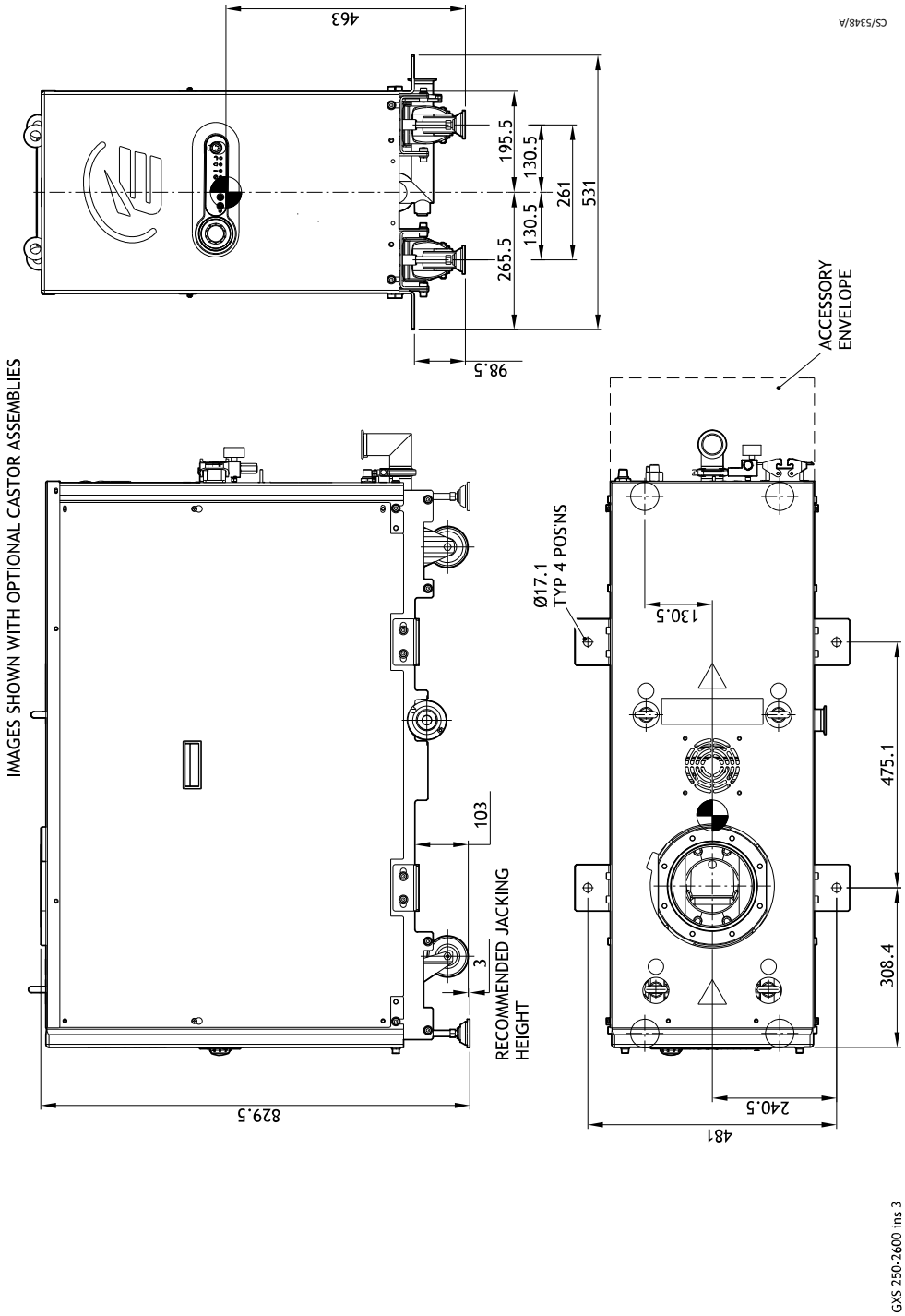

8.5 GXS450

Figure 32 GXS450 installation drawing (Sheet 1)

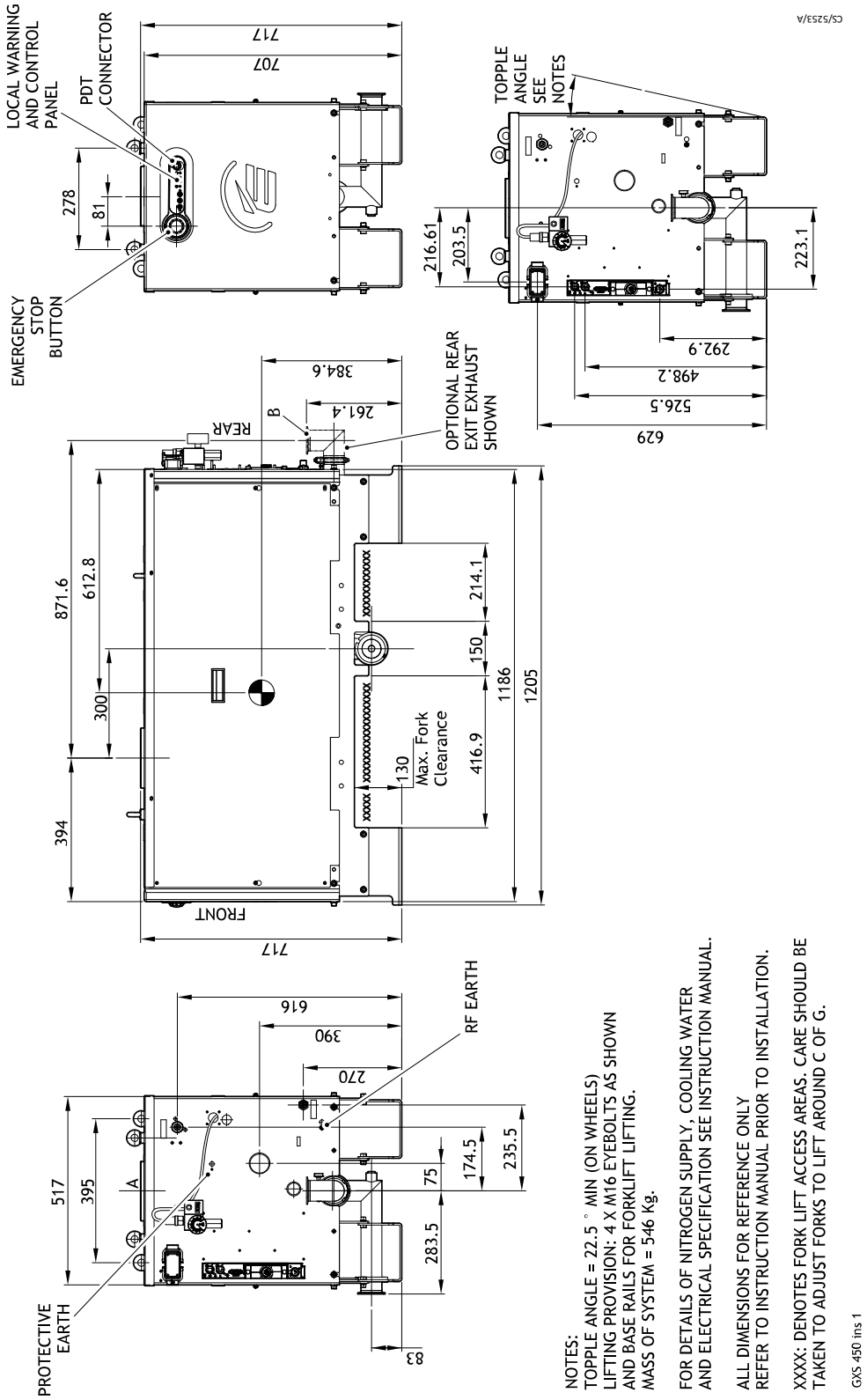

NOTES:
TOPPLE ANGLE = 22.5 ° MIN (ON WHEELS)
LIFTING PROVISION: 4 X M16 EYEBOLTS AS SHOWN
AND BASE RAILS FOR FORKLIFT LIFTING.
MASS OF SYSTEM = 546 Kg.

FOR DETAILS OF NITROGEN SUPPLY, COOLING WATER
AND ELECTRICAL SPECIFICATION SEE INSTRUCTION MANUAL.

ALL DIMENSIONS FOR REFERENCE ONLY
REFER TO INSTRUCTION MANUAL PRIOR TO INSTALLATION.

XXXX: DENOTES FORK LIFT ACCESS AREAS. CARE SHOULD BE
TAKEN TO ADJUST FORKS TO LIFT AROUND C OF G.

GXS 450 ins 1

Figure 33 GXS450 installation drawing (Sheet 2)

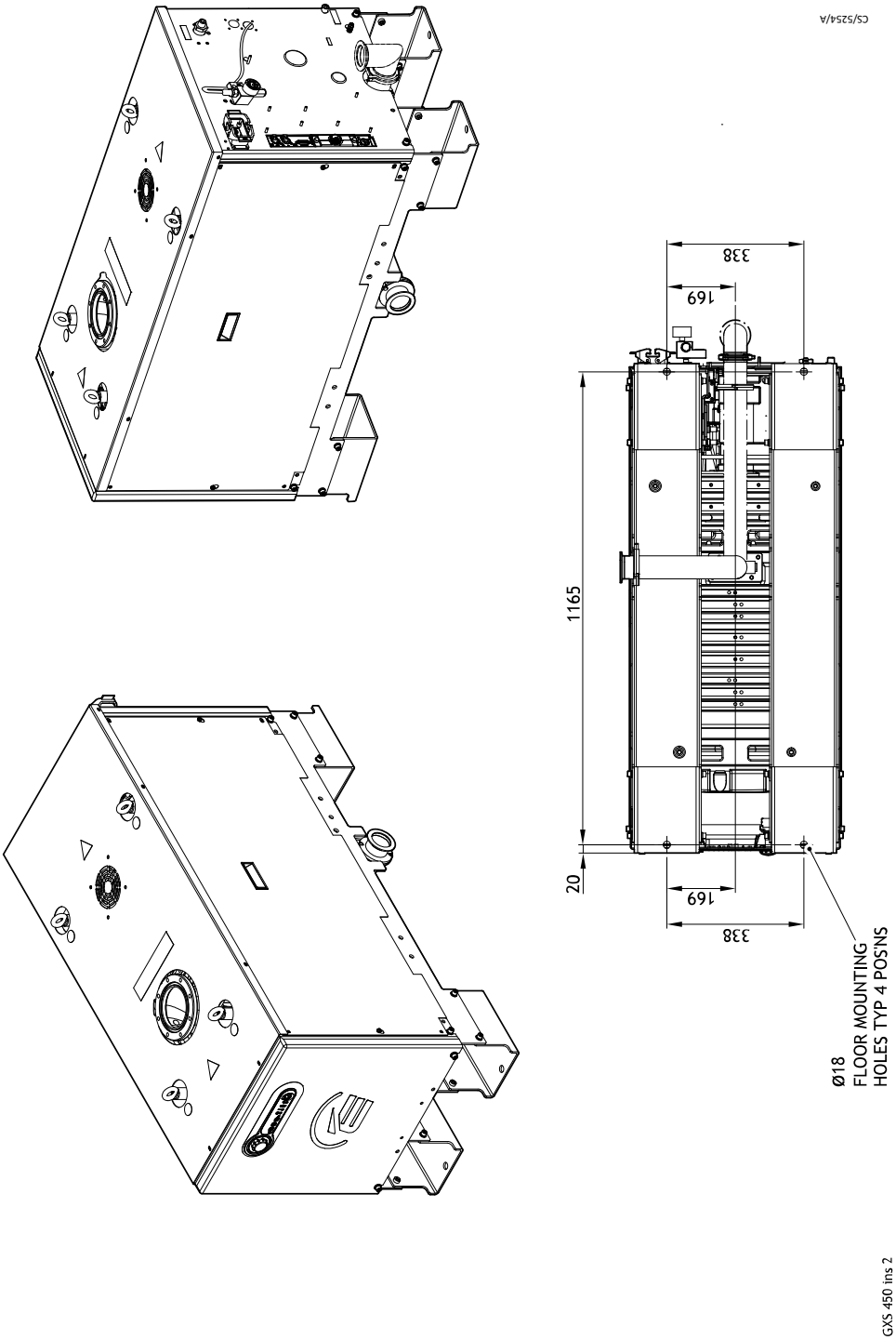

Figure 34 GXS450 installation drawing (Sheet 3)

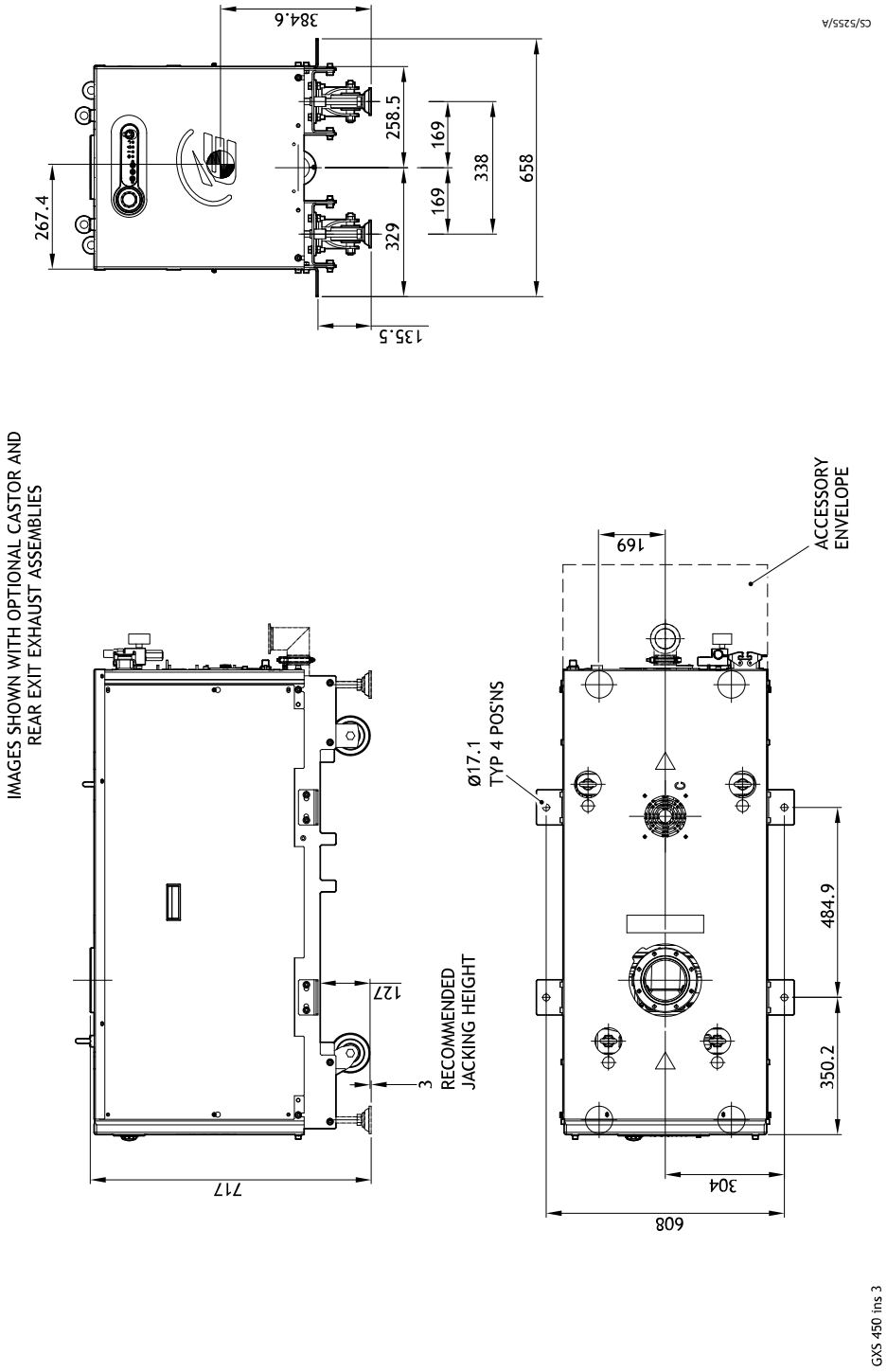

Figure 35 GXS450 installation drawing (Sheet 4)

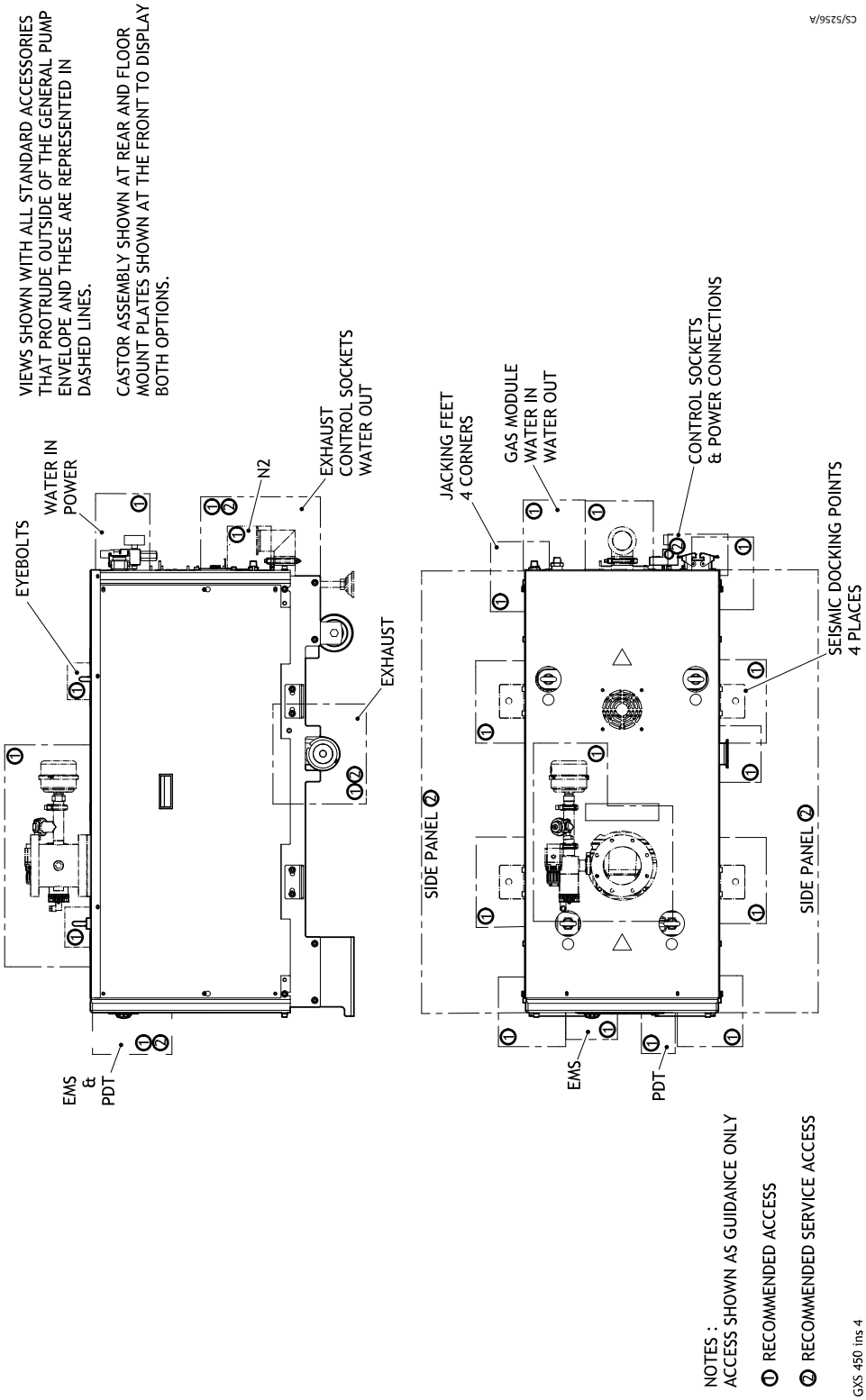

8.6 GXS450/2600

Figure 36 GXS450/2600 installation drawing (Sheet 1)

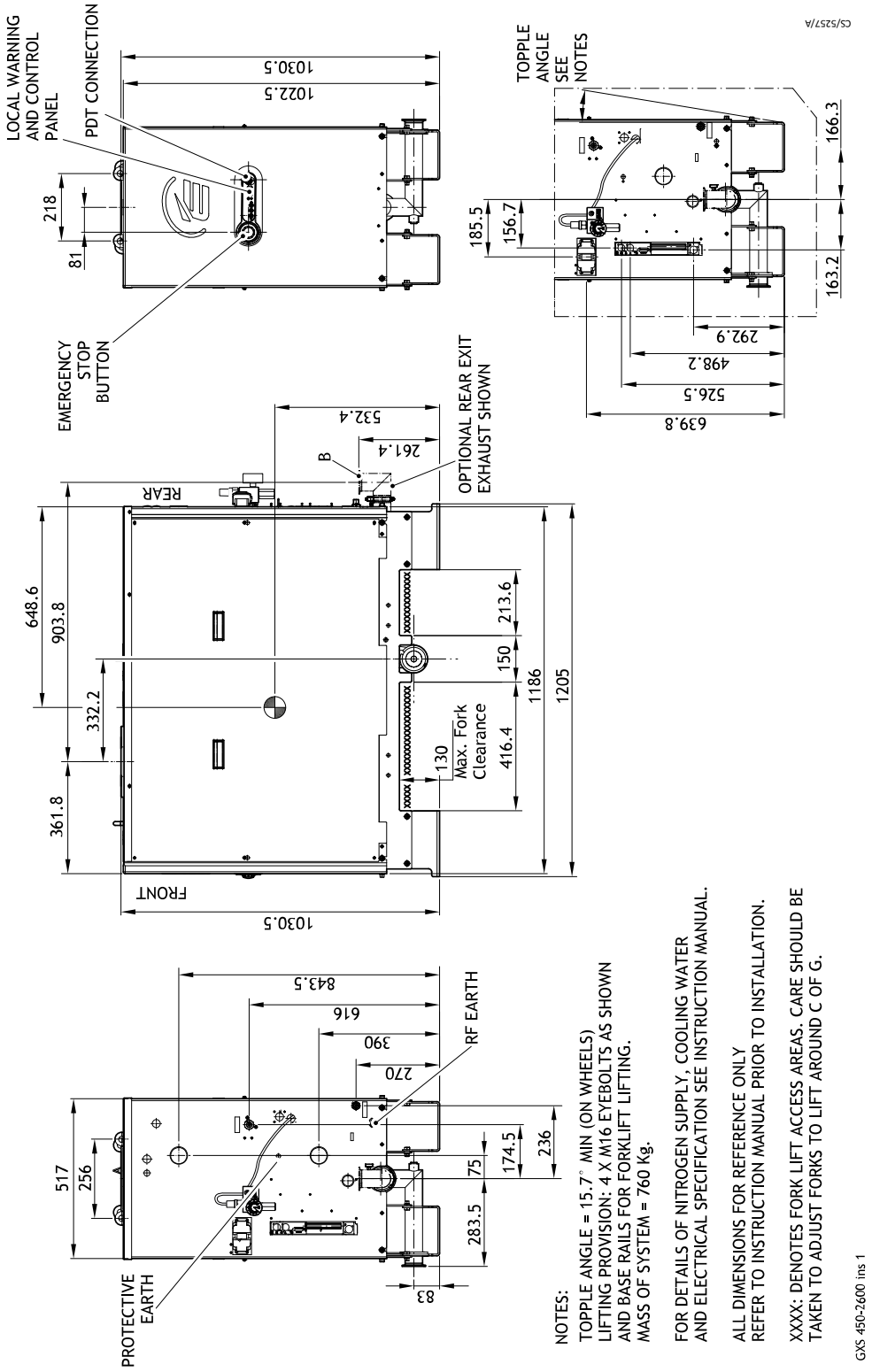

Figure 37 GXS450/2600 installation drawing (Sheet 2)

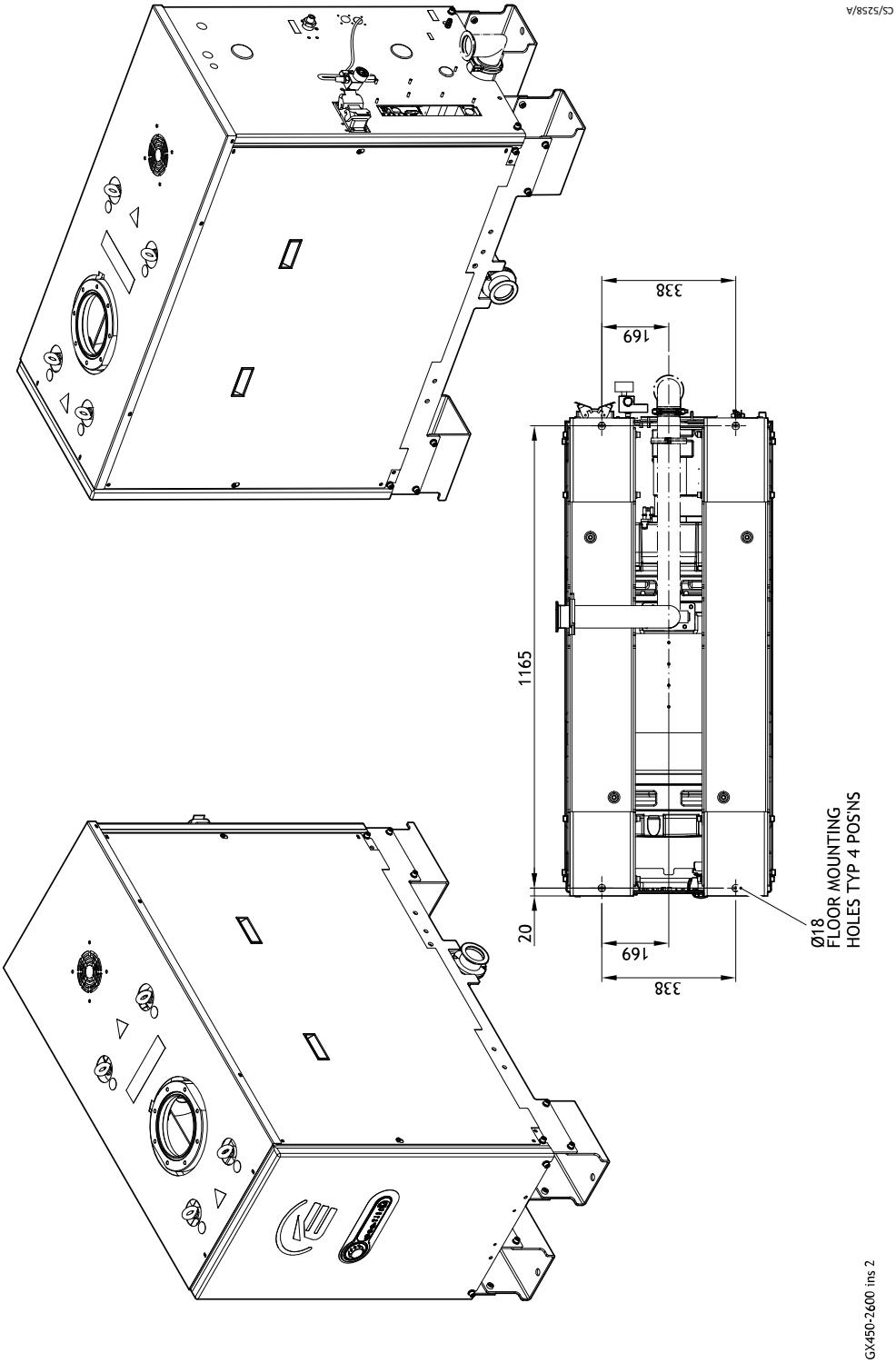

Figure 38 GXS450/2600 installation drawing (Sheet 3)

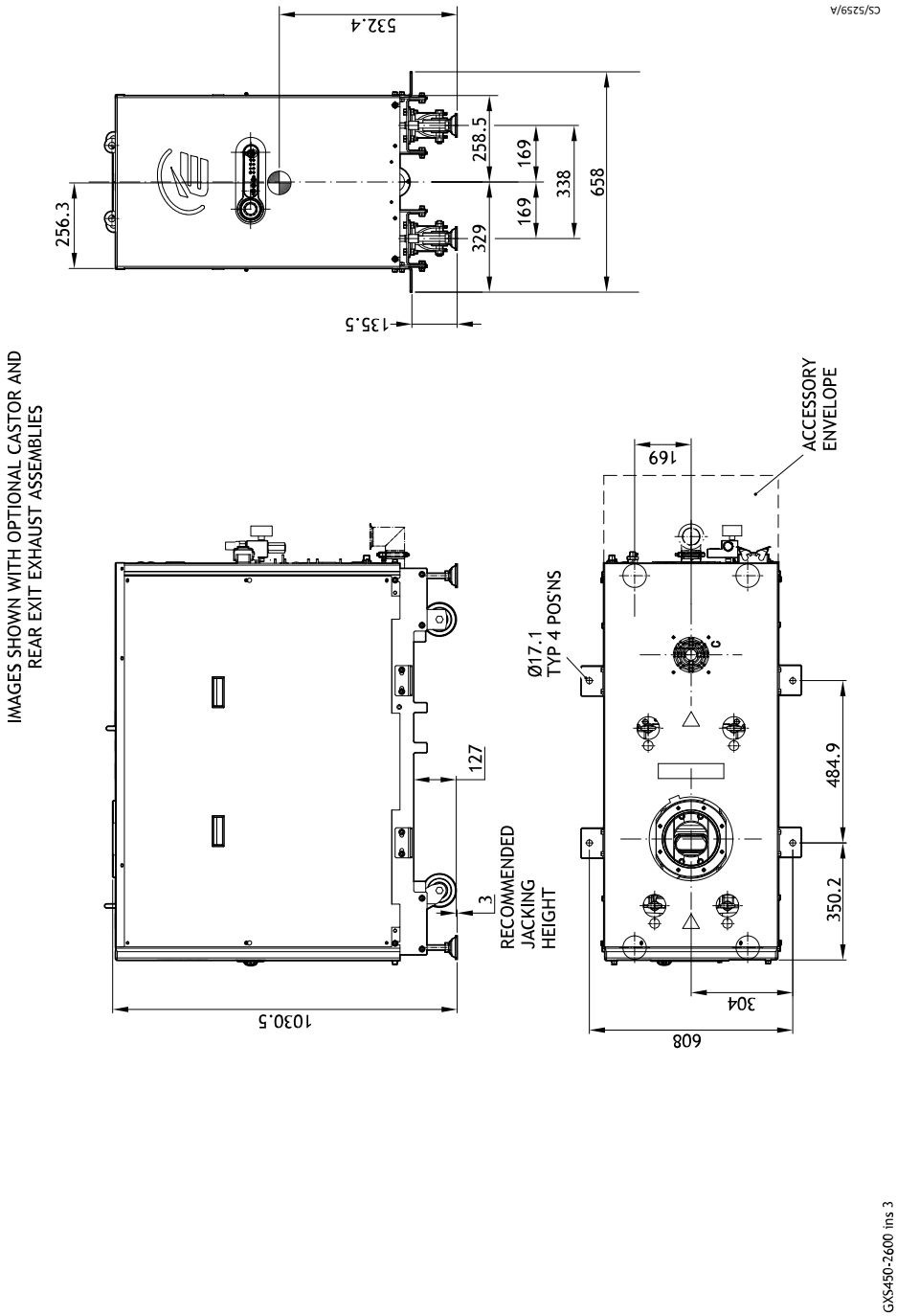

Figure 39 GXS450/2600 installation drawing (Sheet 4)

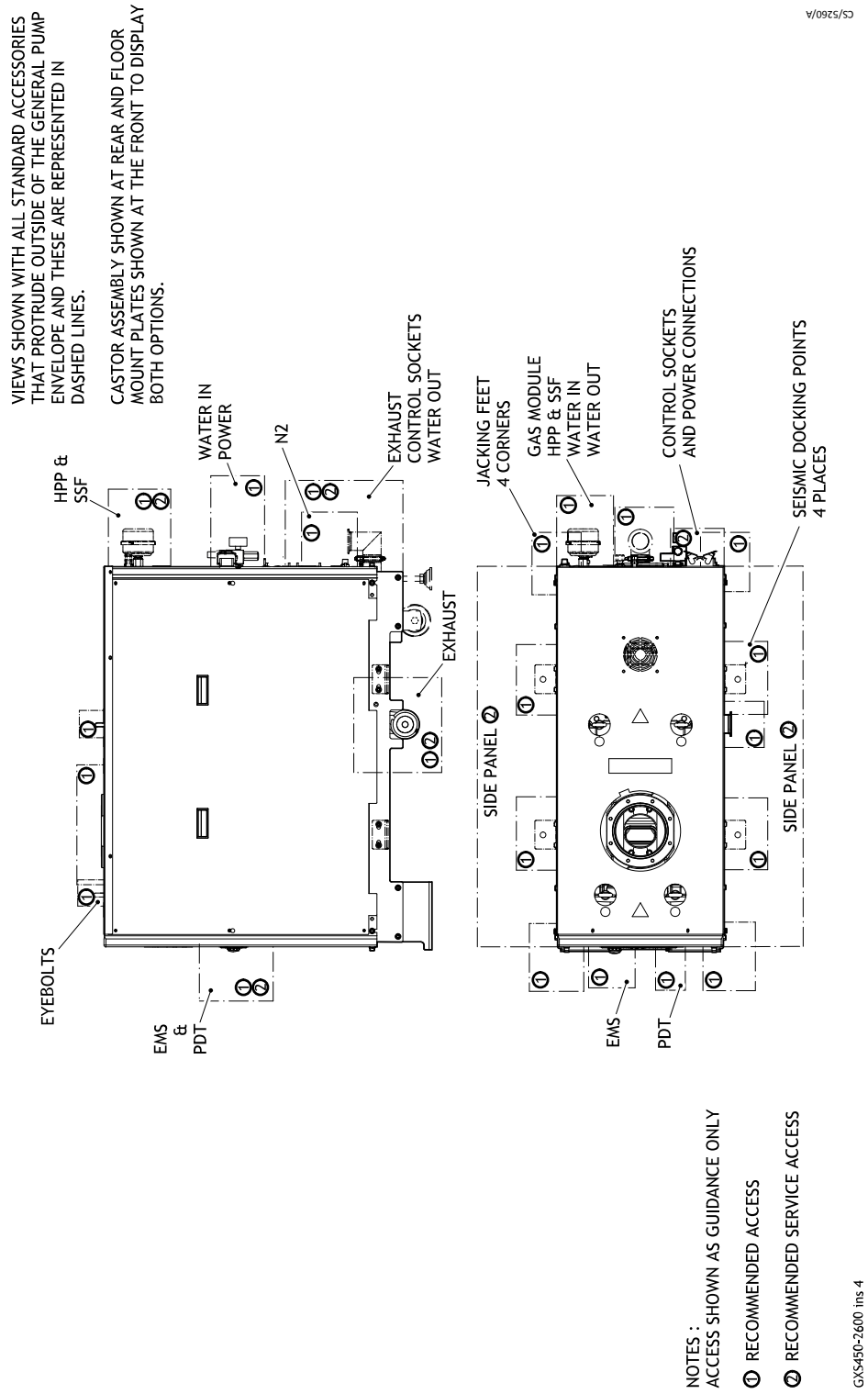

8.7 GXS450/4200

Figure 40 GXS450/4200 installation drawing (Sheet 1)

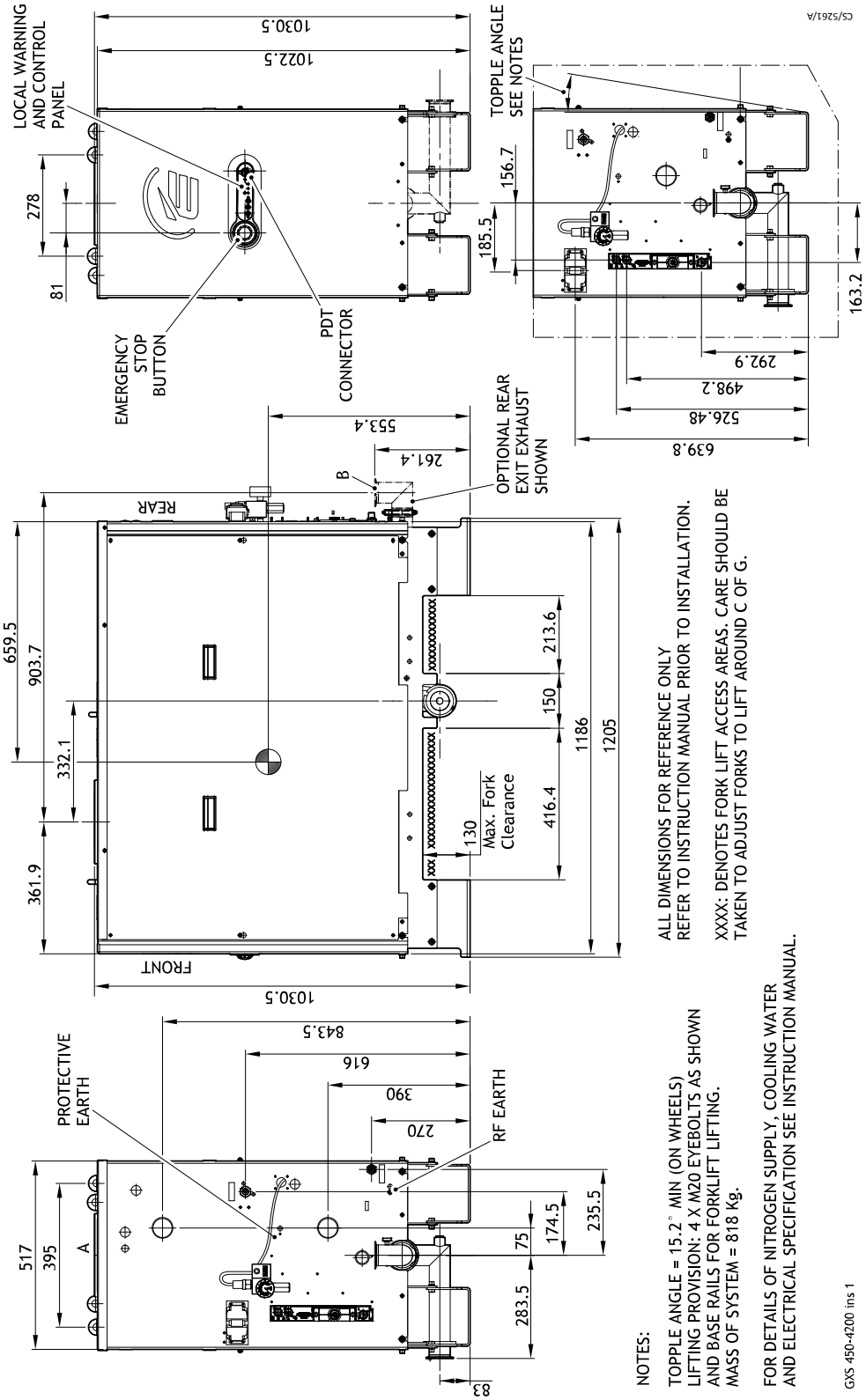

Figure 41 GXS450/4200 installation drawing (Sheet 2)

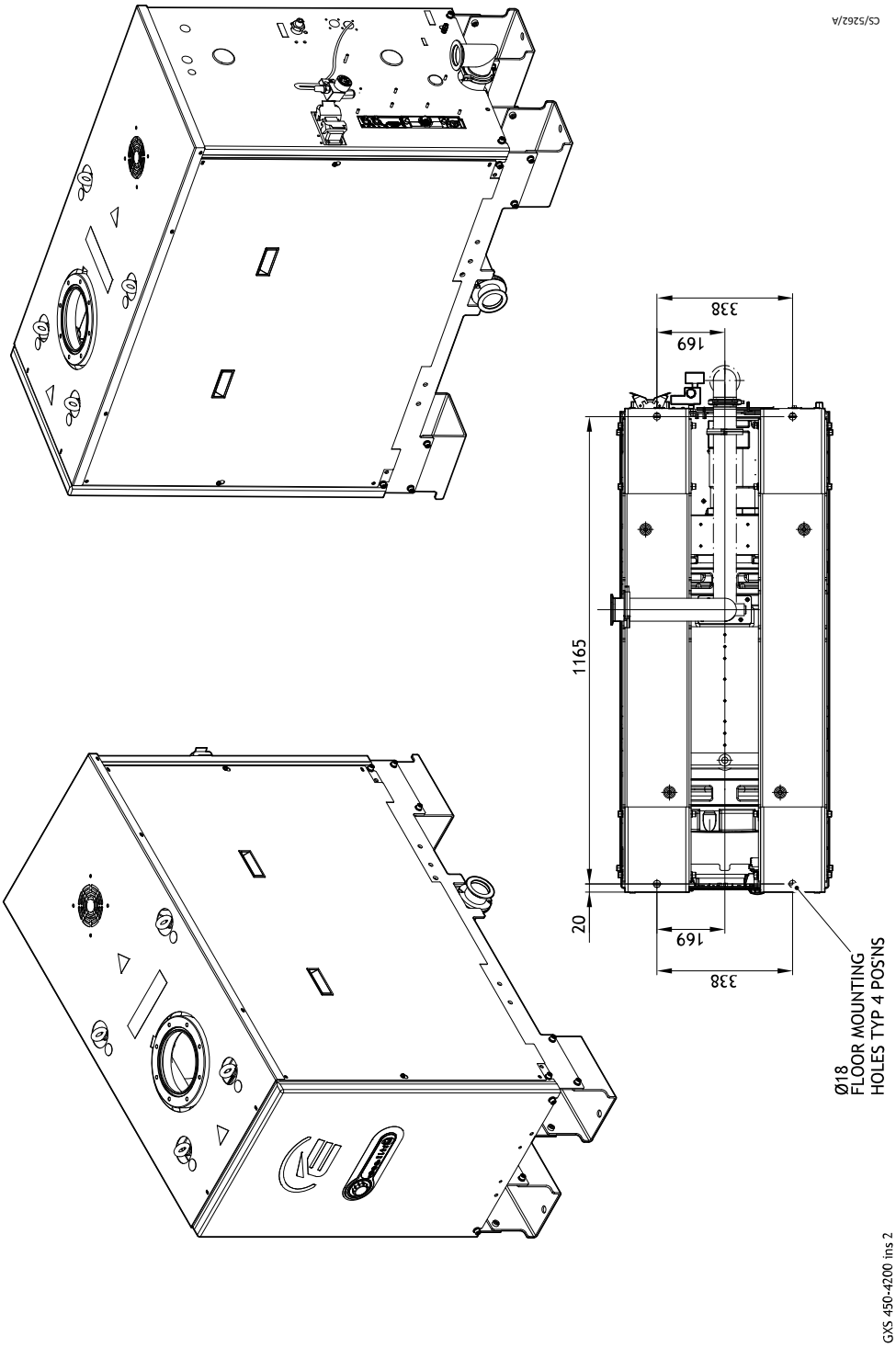

Figure 42 GXS450/4200 installation drawing (Sheet 3)

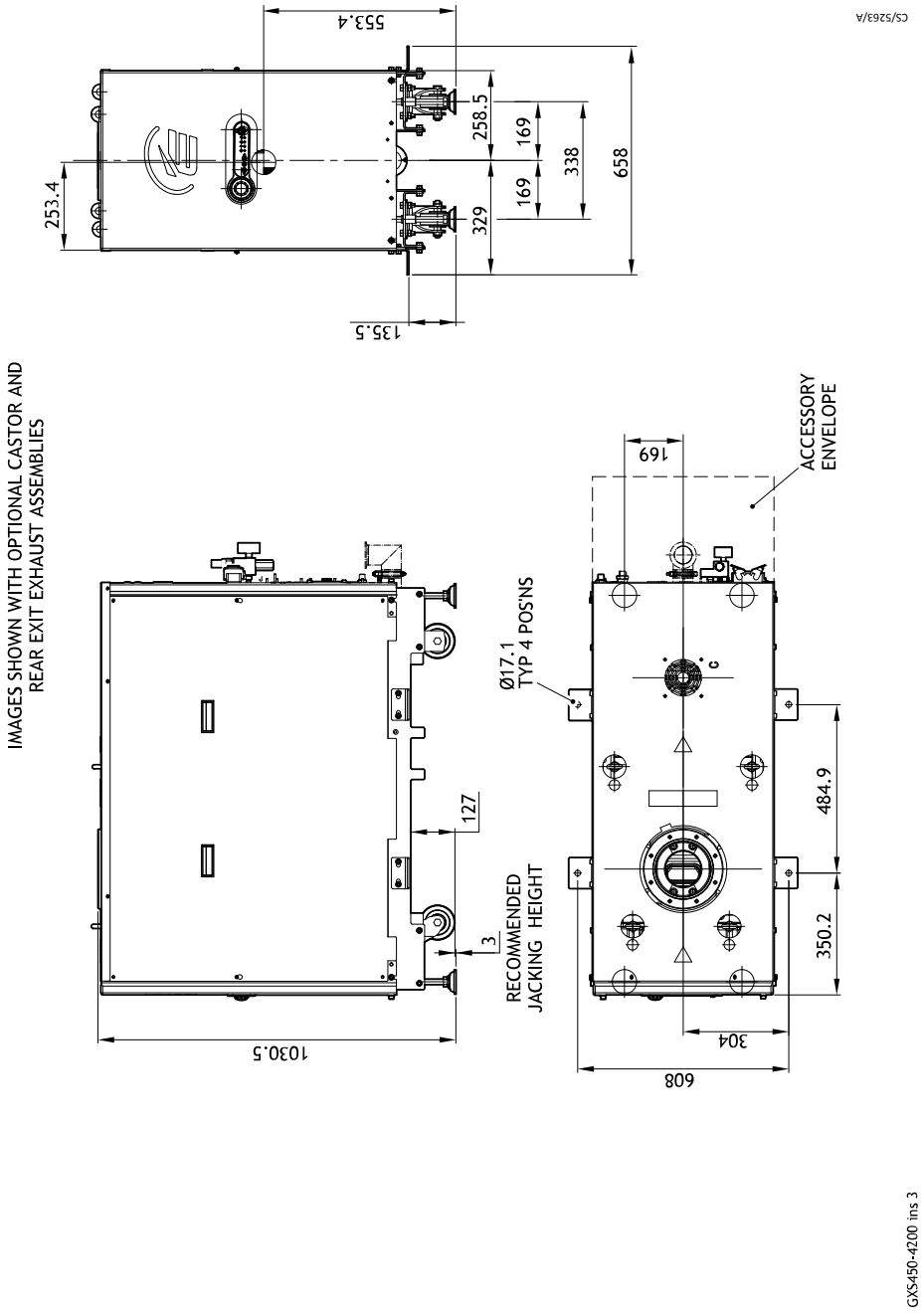

Figure 43 GXS450/4200 installation drawing (Sheet 4)

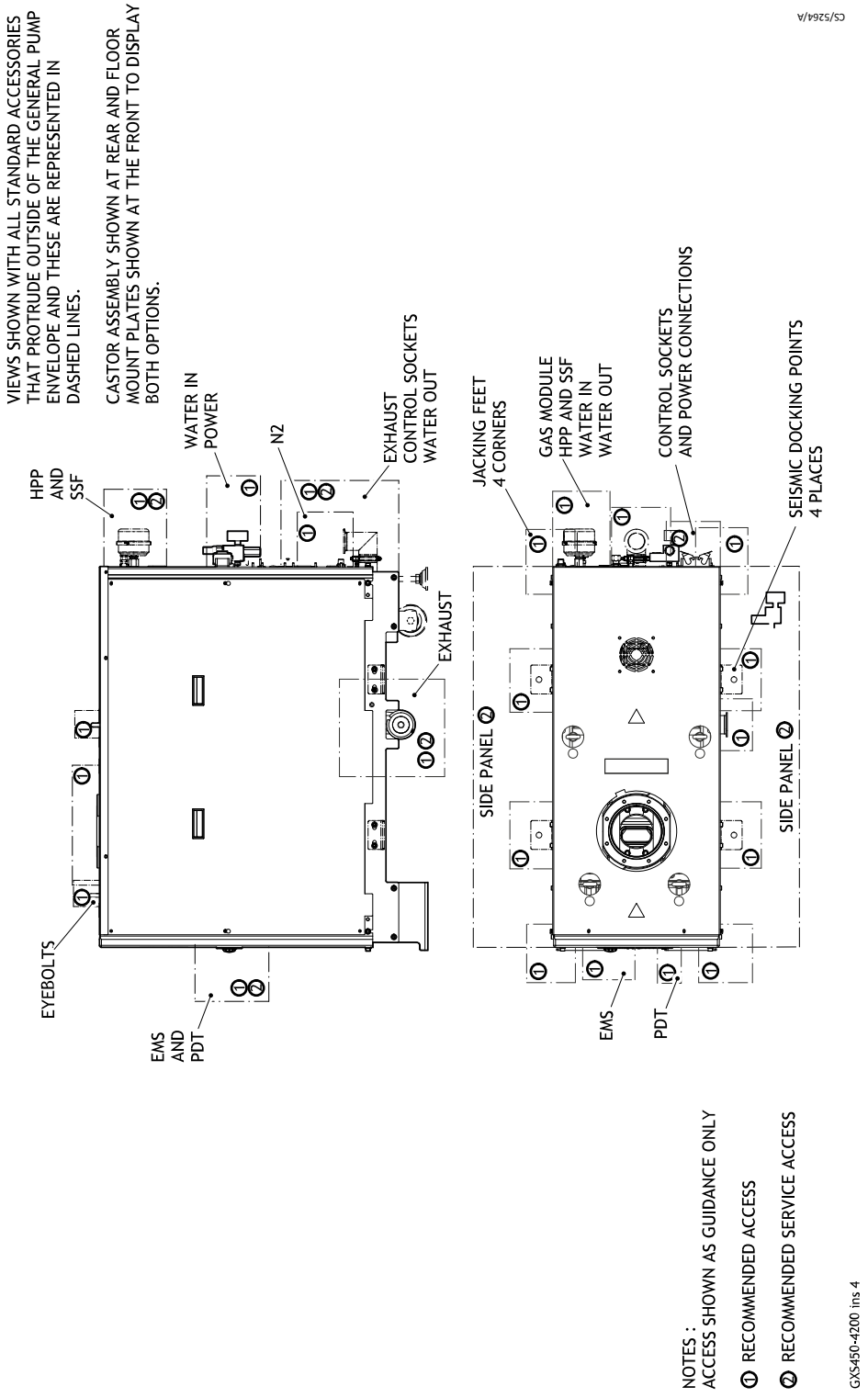

8.8 GXS750

Figure 44 GXS750 installation drawing (Sheet 1)

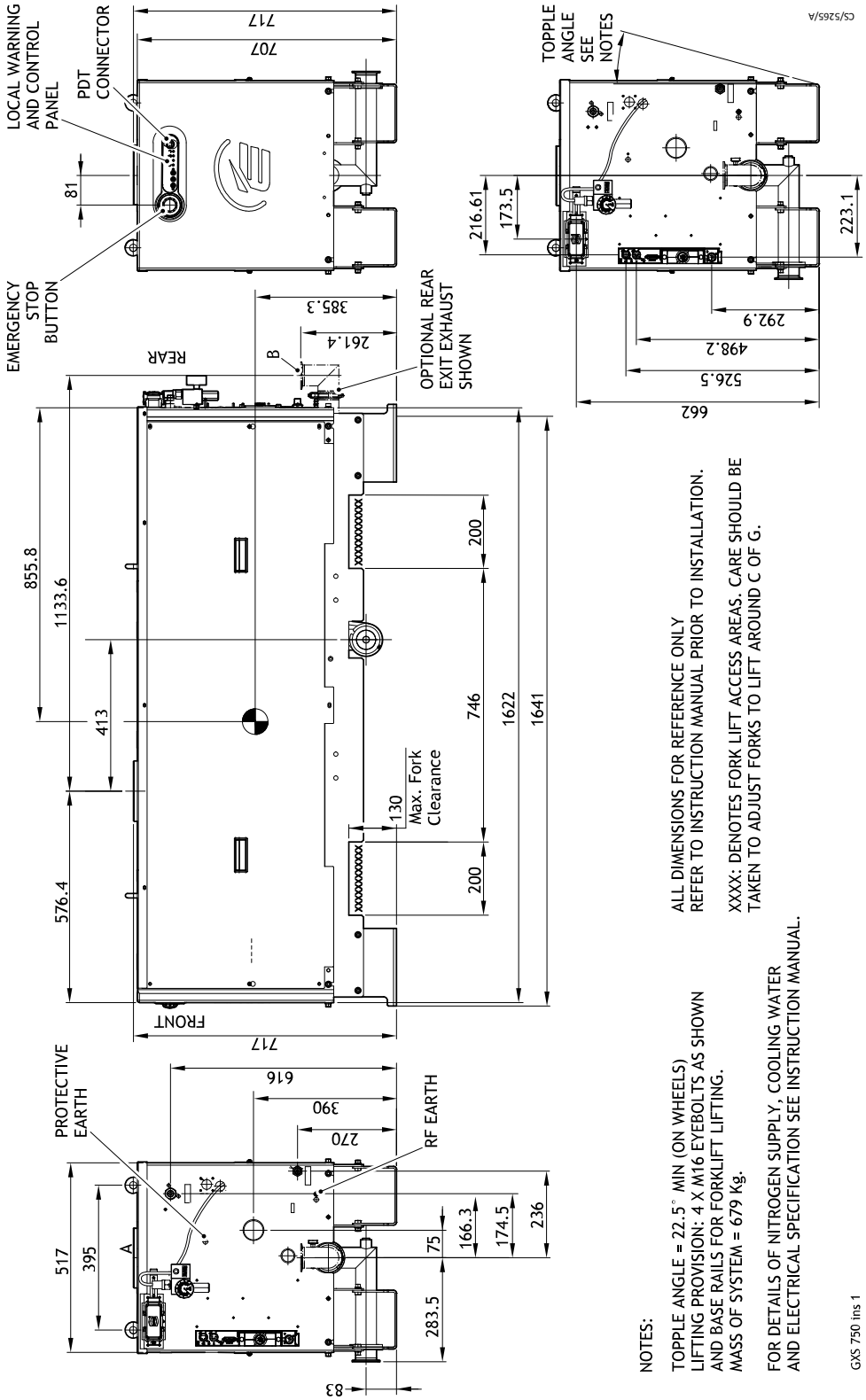

Figure 45 GXS750 installation drawing (Sheet 2)

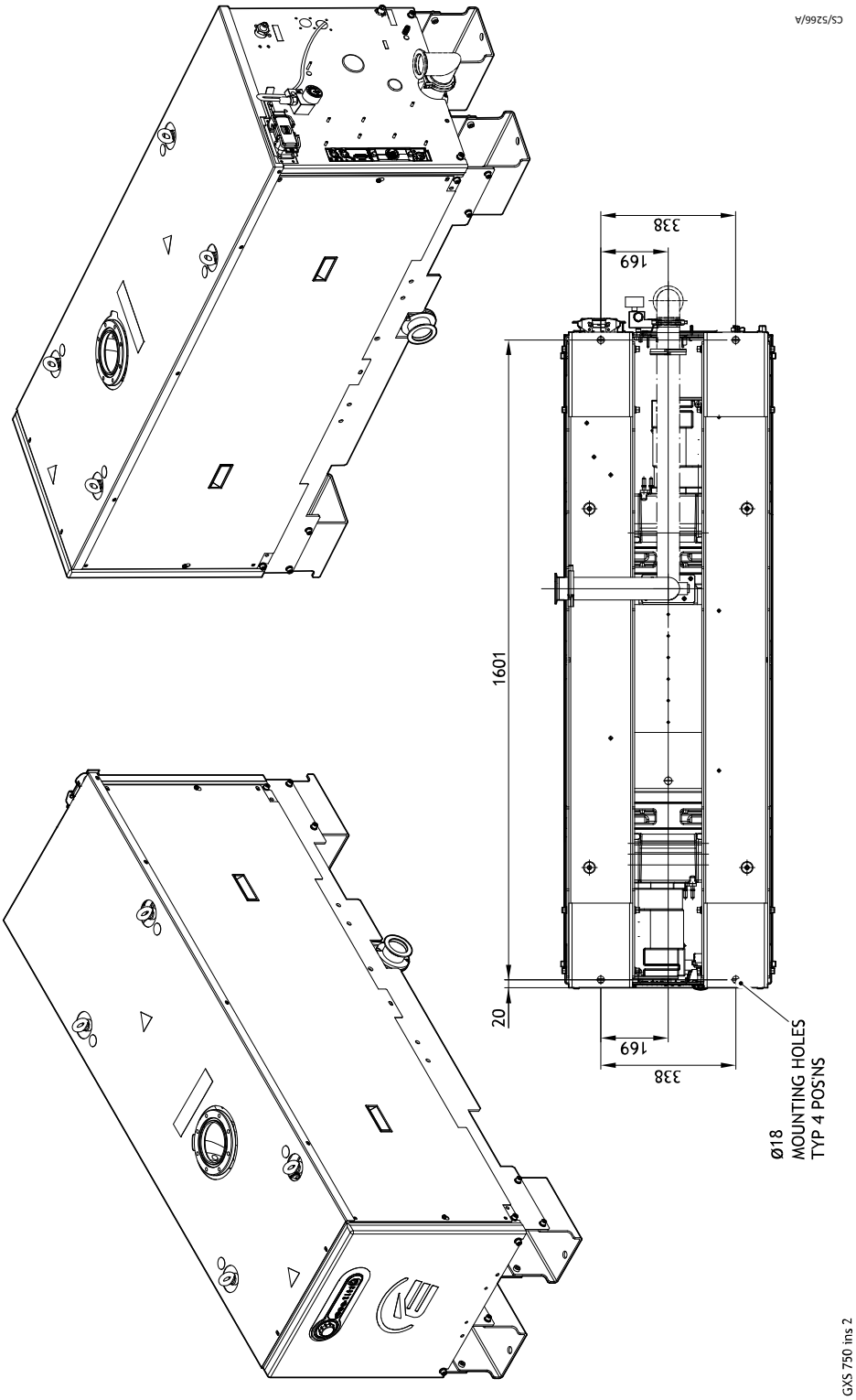

Figure 46 GXS750 installation drawing (Sheet 3)

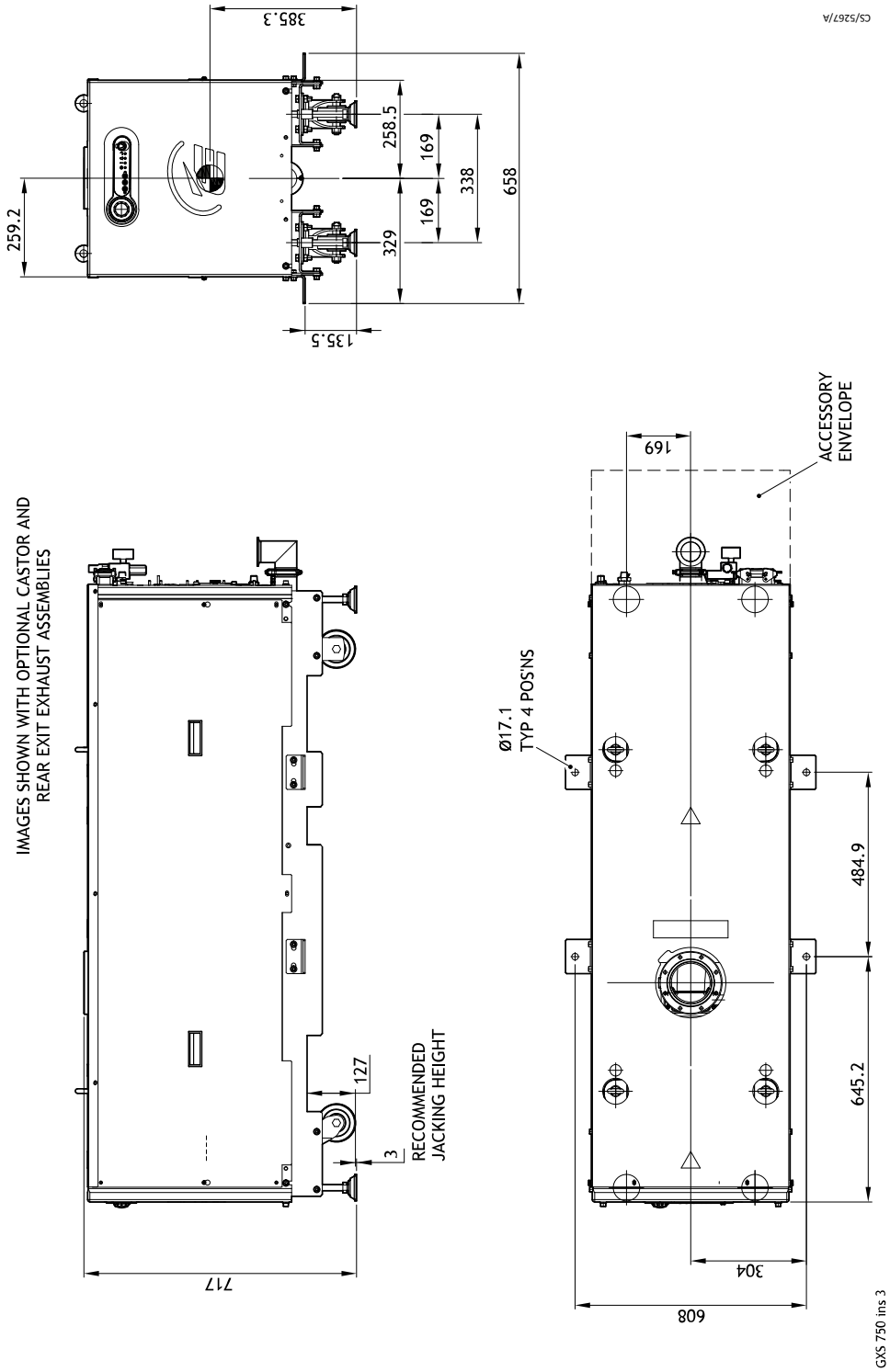

Figure 47 GXS750 installation drawing (Sheet 4)

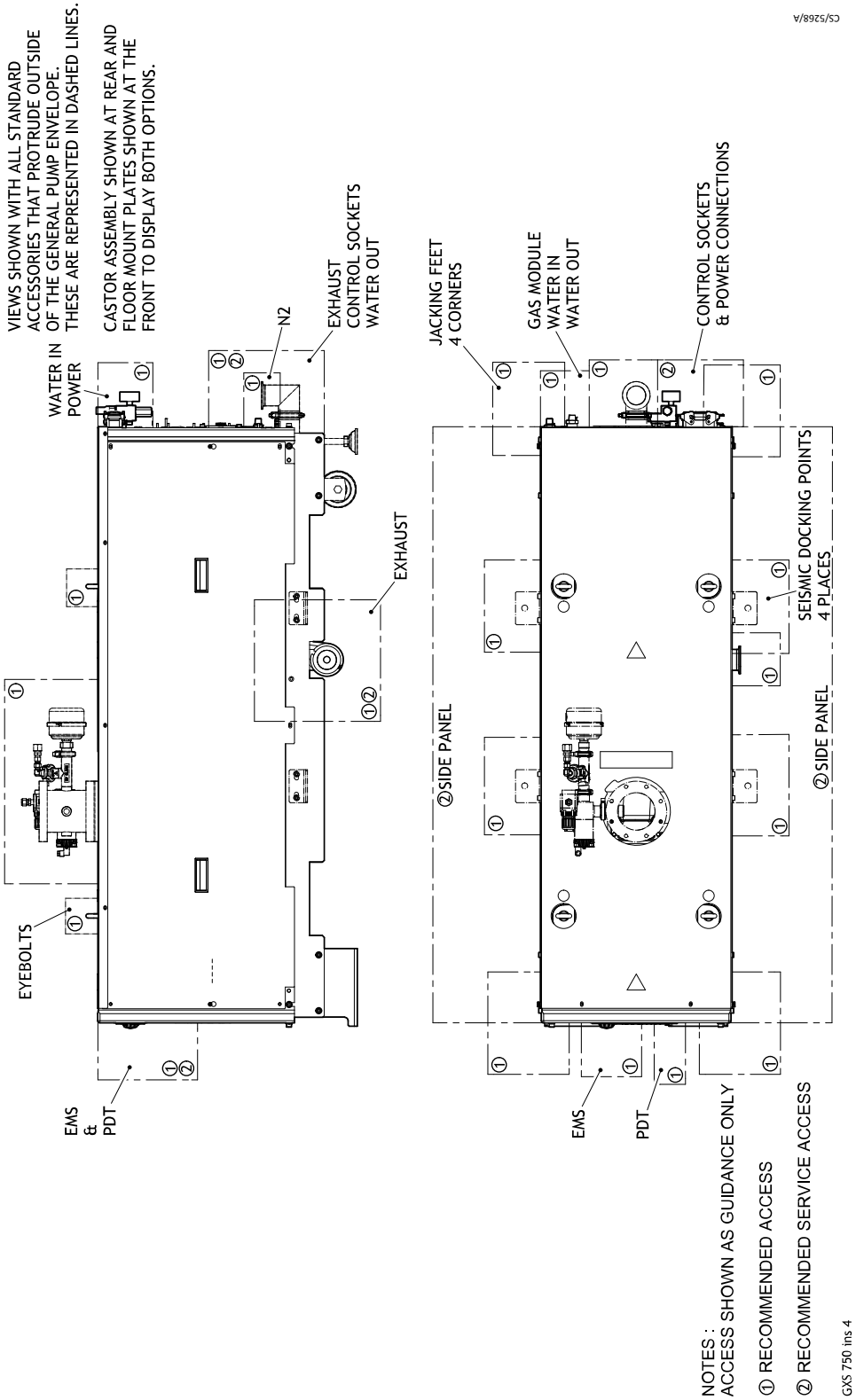

8.9 GXS750/2600

Figure 48 GXS750/2600 installation drawing (Sheet 1)

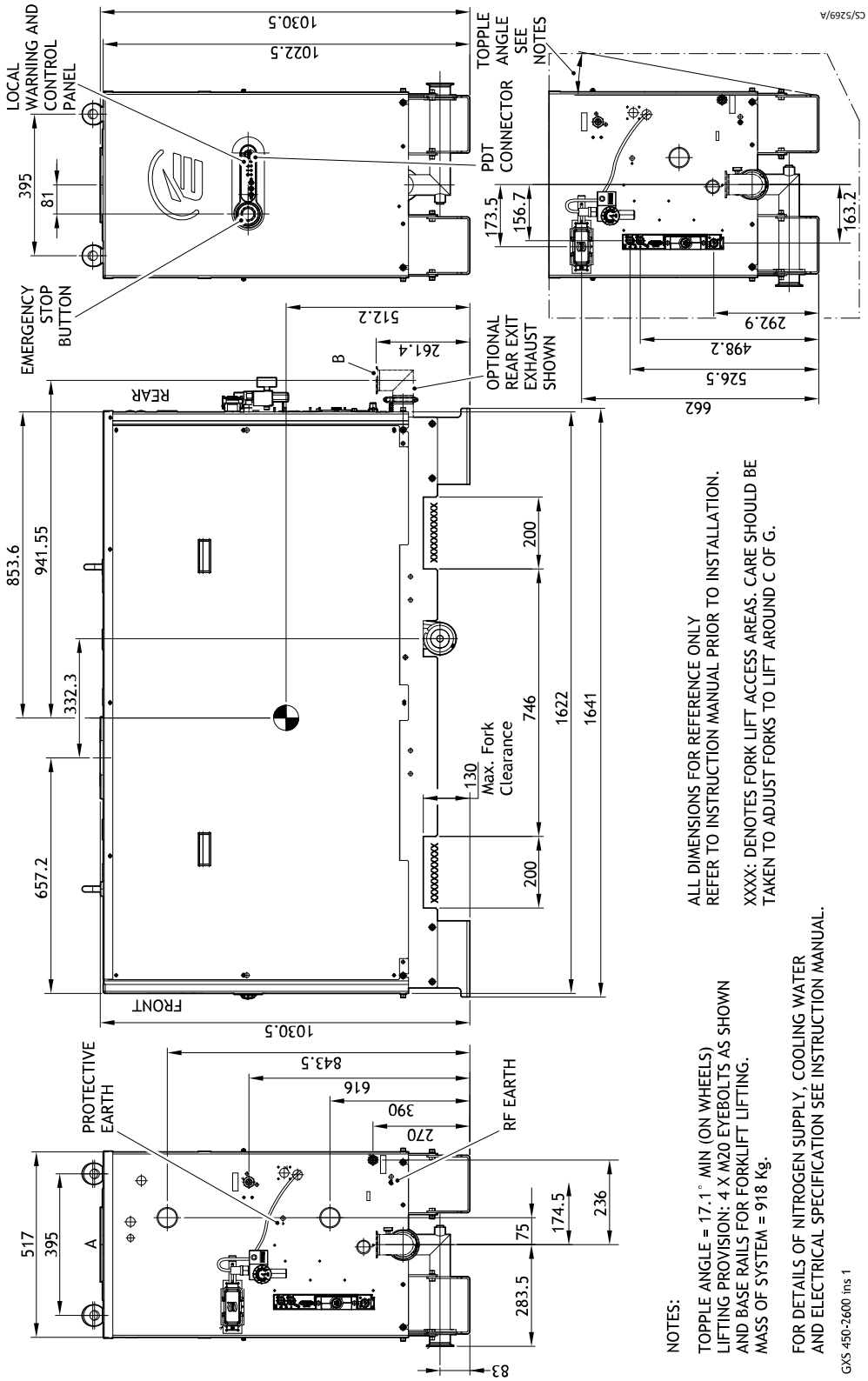

Figure 49 GXS750/2600 installation drawing (Sheet 2)

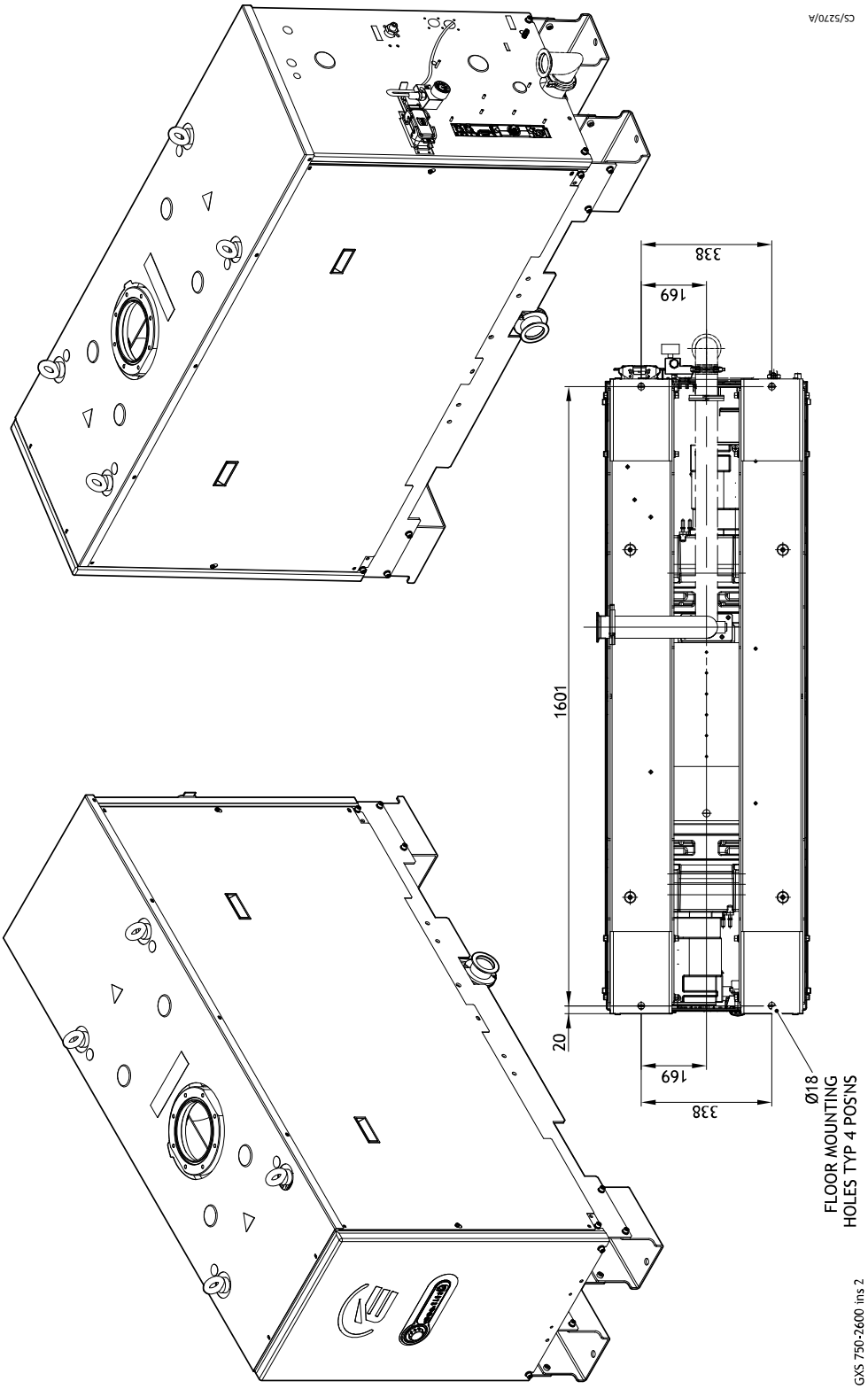

Figure 50 GXS750/2600 installation drawing (Sheet 3)

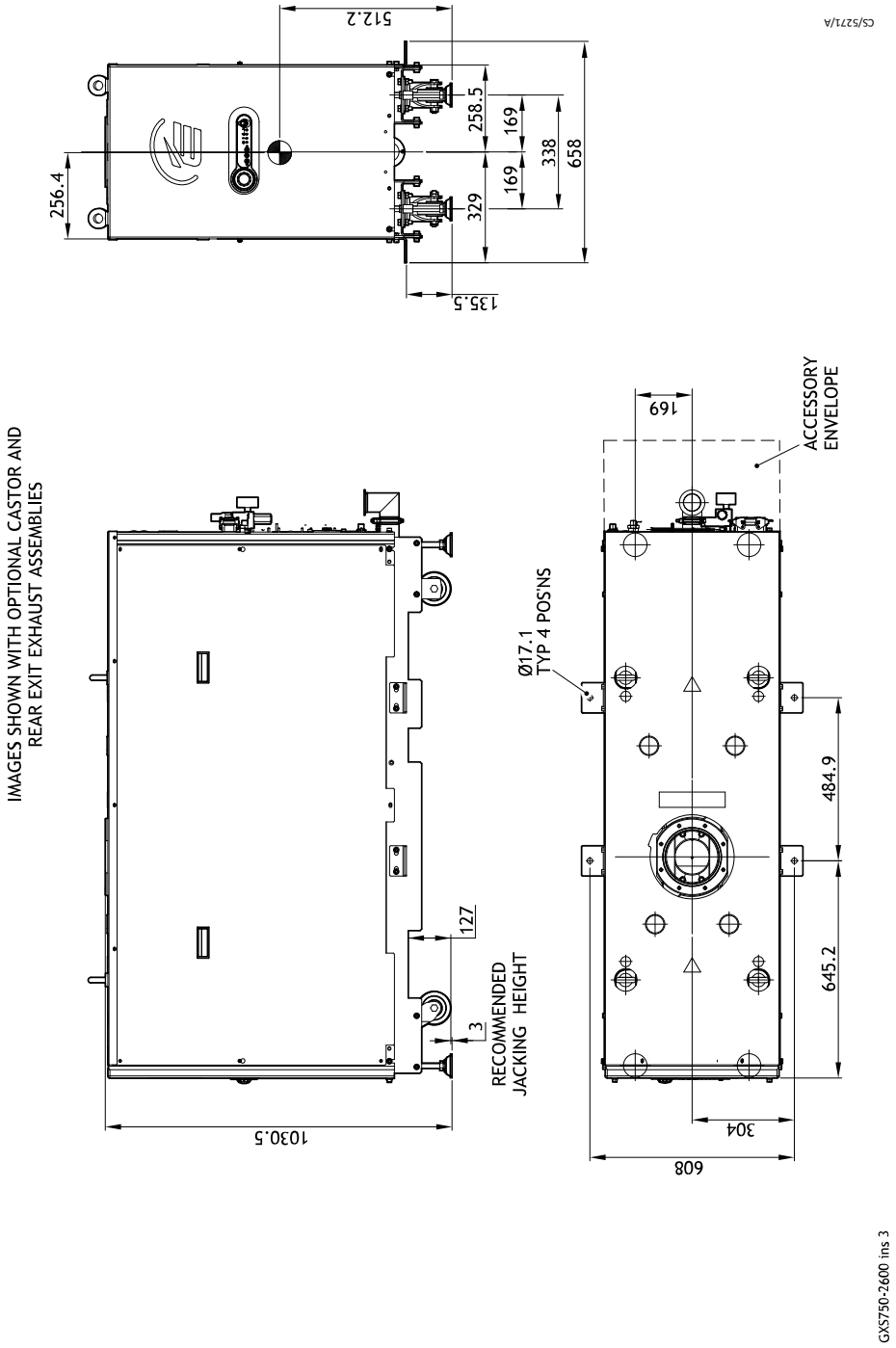

Figure 51 GXS750/2600 installation drawing (Sheet 4)

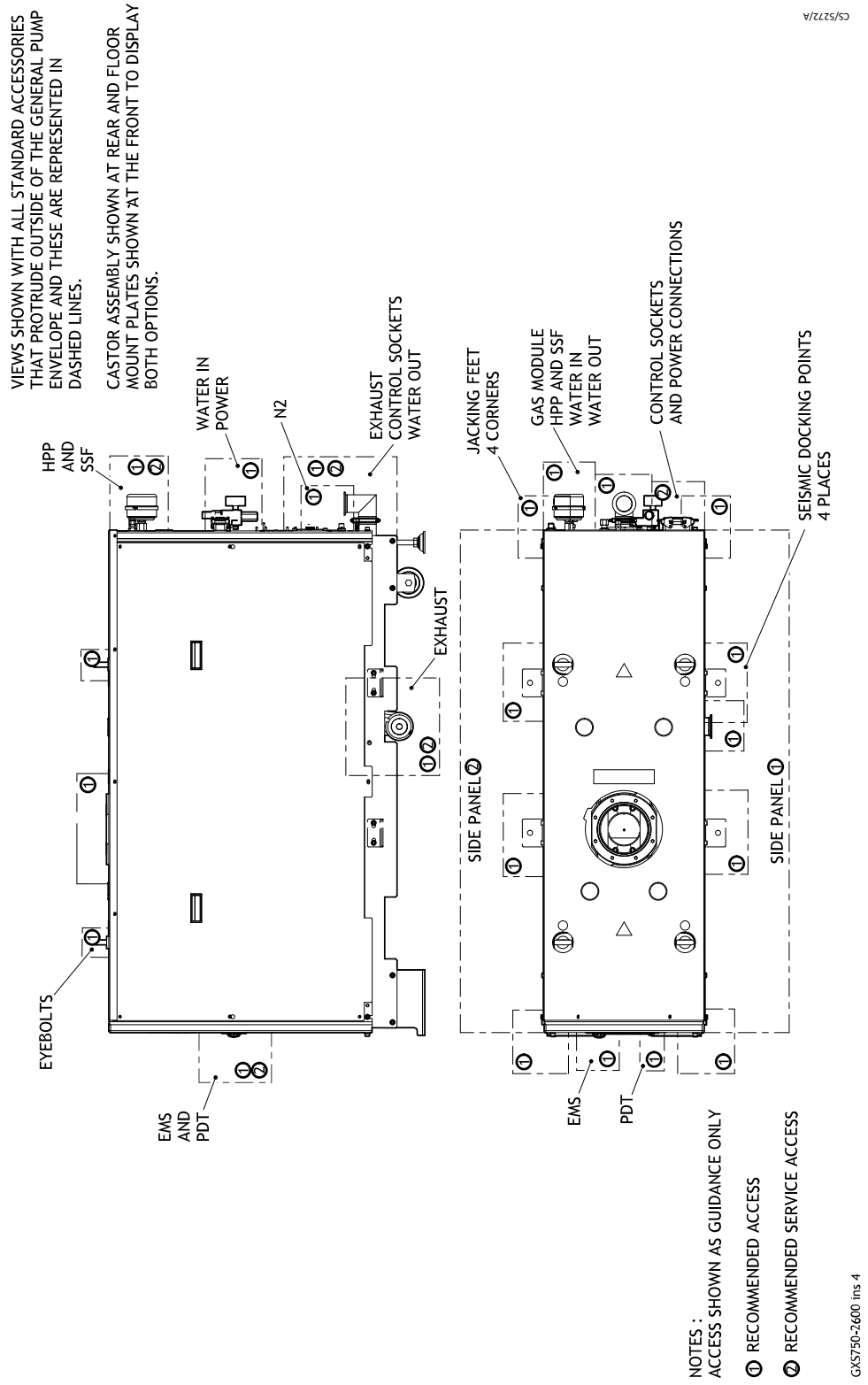

8.10 GXS750/4200

Figure 52 GXS750/4200 installation drawing (Sheet 1)

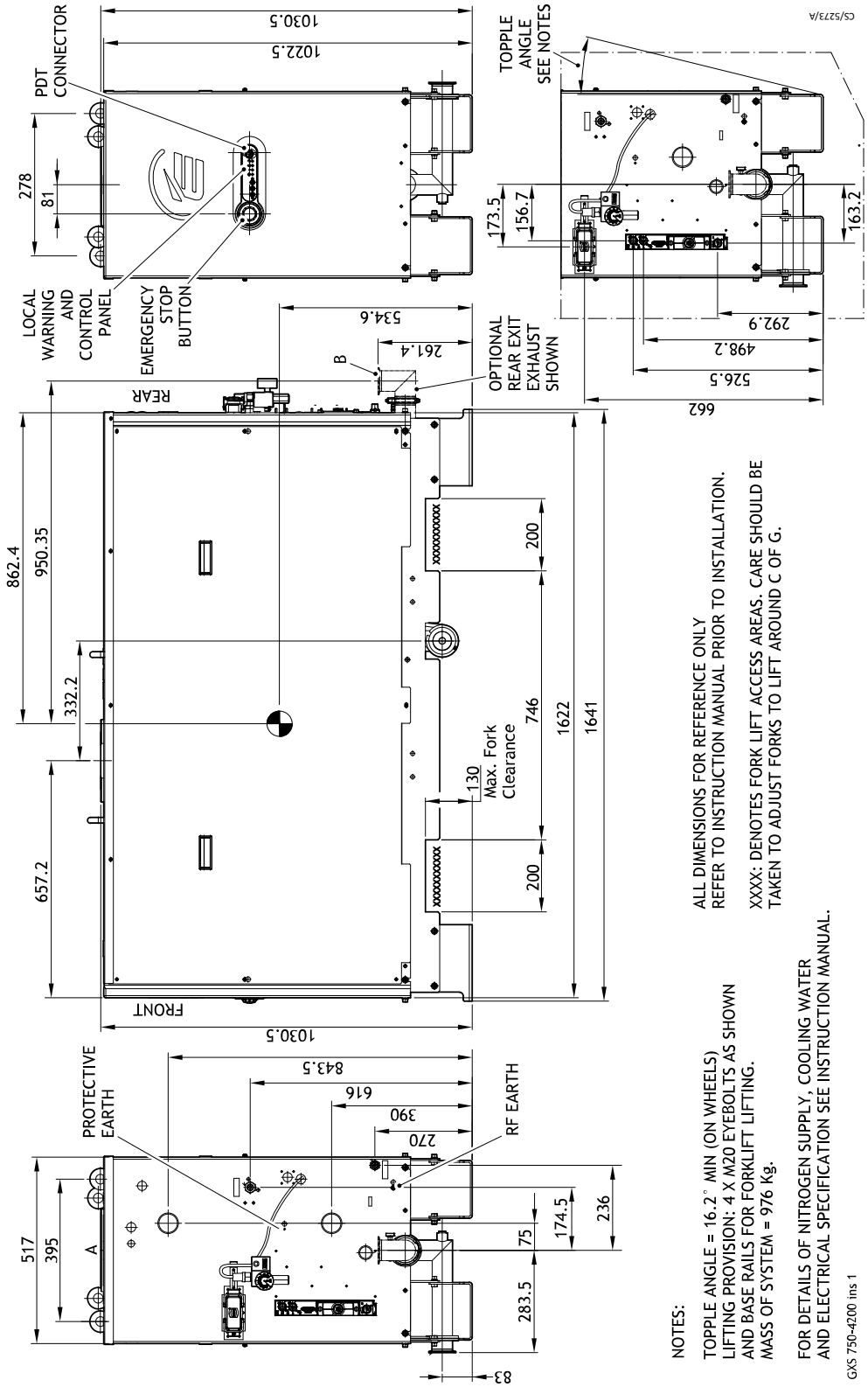

Figure 53 GXS750/4200 installation drawing (Sheet 2)

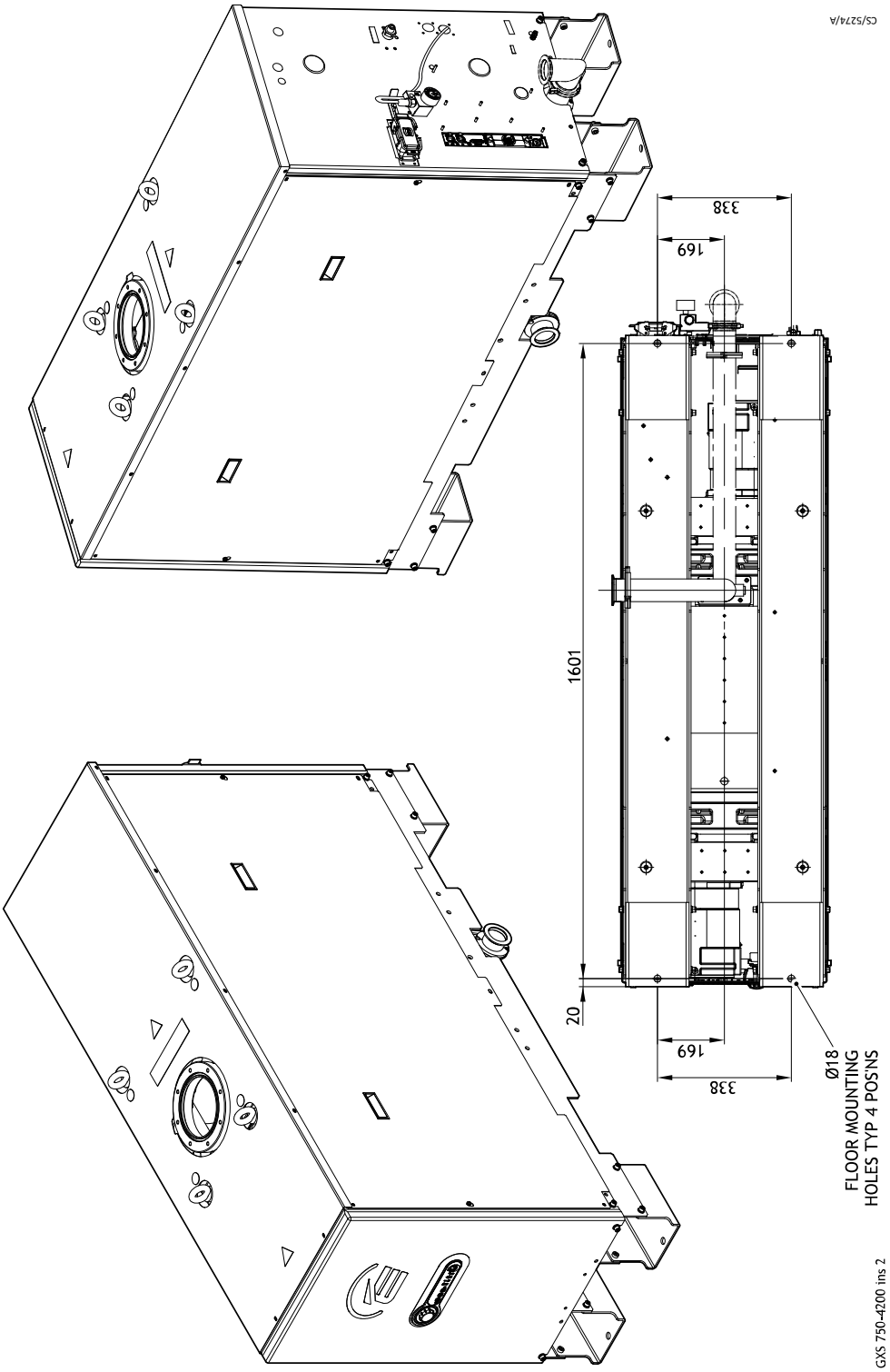

Figure 54 GXS750/4200 installation drawing (Sheet 3)

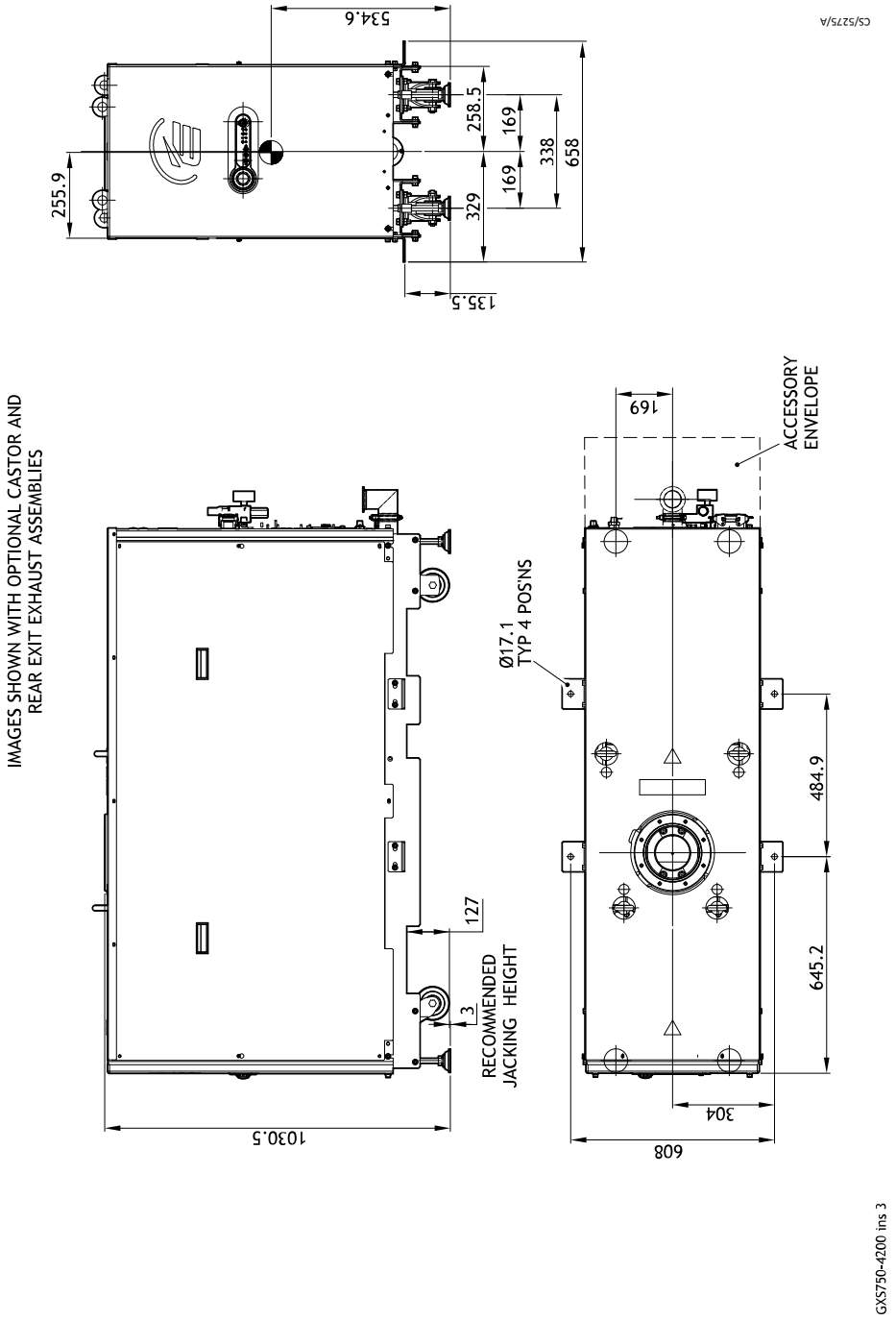

Figure 55 GXS750/4200 installation drawing (Sheet 4)

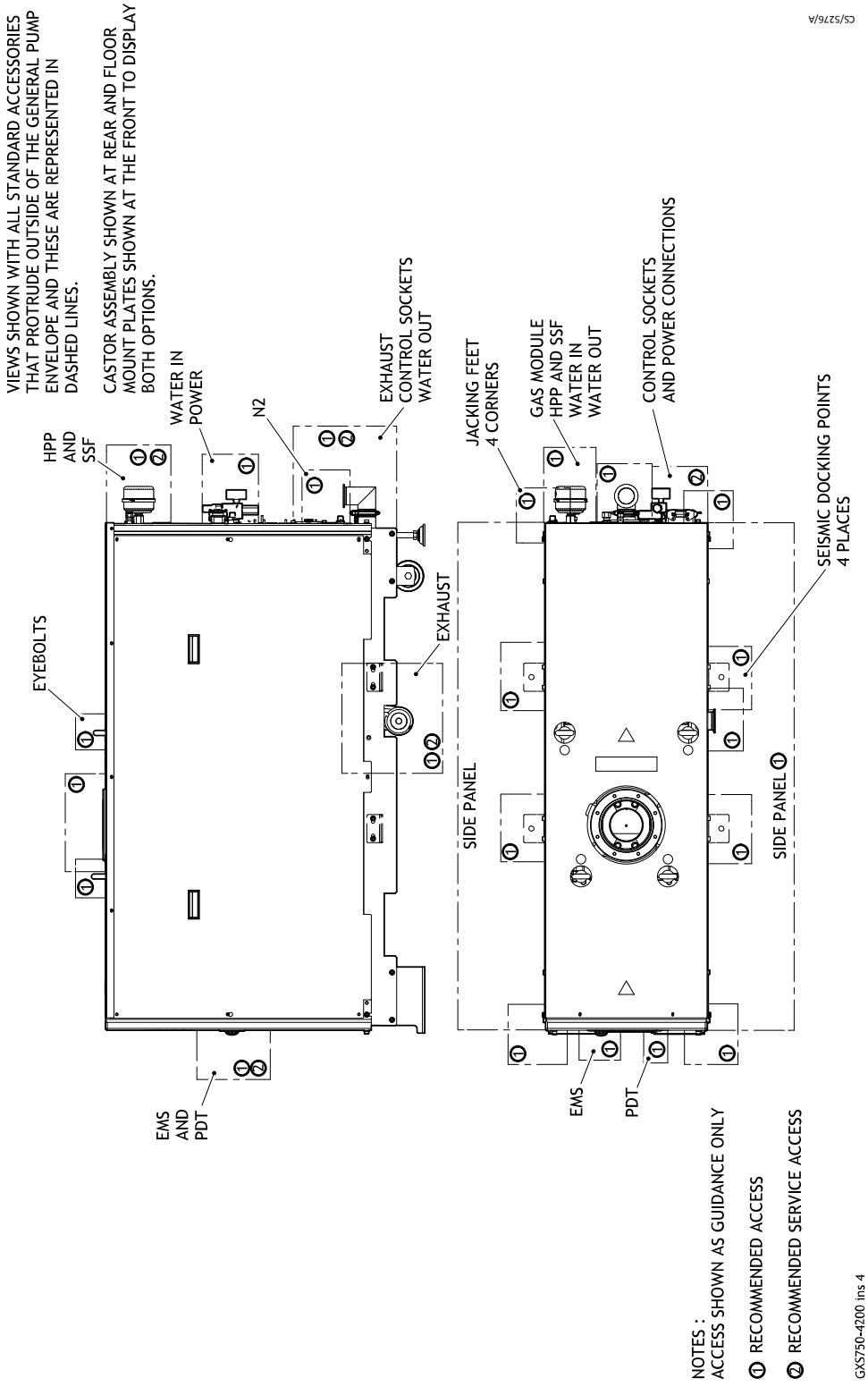

9. Pump display terminal

The PDT accessory provides pump on/off and status reporting. Warnings and alarms are also indicated to the user. Up to two PDTs may be fitted.

Figure 56 Pump display terminal

9.1 LEDs

LOCAL CONTROL green LED illuminates continuously when this PDT has the control of the pump.

PUMP ON green LED (within the pump start button) illuminates to indicate that the pump is running. The LED illuminates continuously when the pump is on-process and flashes when the pump is warming up, stopping or when it is in Green mode/standby mode.

WARNING yellow LED illuminates to indicate that a pump warning is present. It flashes when a new warning occurs until it is acknowledged by pressing ENTER when it goes continuous until the warning clears. The warning LED also flashes when a new event is present. Once the event has been acknowledged the warning LED will return to its previous state.

ALARM red LED illuminates to indicate that a pump alarm is present. It flashes when a new alarm occurs until it is acknowledged by pressing ENTER when it goes continuous until the alarm clears.

9.2 Pump start/stop and control

To start or stop the pump the PDT must be in control, indicated by the local control LED being illuminated.

To take or release the control briefly press CONTROL.

If something else is in control the error message 'Control locked' appears, refer to 'Control Holder' in the status menu.

Table 28 PDT displays

Pump state	Local control LED	PDT display	Operator	Pump response
Press Start button PDT displays:				
Stopped	On	START MENU Start Pump	Press ENTER to confirm	Pump starts
Running	On	Pump Running Press CANCEL	Press CANCEL	No change (running)
Stopped or Running	Off	No PDT Control Press CANCEL	Press CANCEL	No change
Press Stop button PDT displays:				
Stopped	On	PUMP Stopped Press CANCEL	Press CANCEL	No change (stopped)
Running	On	STOP MENU Auto Shutdown	If Fast Shutdown is required, press the down arrow. Press ENTER to confirm	Pump stops
Stopped or Running	Off	No PDT Control Press CANCEL	Press CANCEL	No change

9.3 Event/warning/alarm display and acknowledgement

Each new event/warning/alarm is displayed when it occurs, overwriting any text already present unless another unacknowledged event/warning/alarm is currently being displayed. The corresponding warning/alarm LED flashes to indicate a new event/warning/alarm.

Pressing ENTER acknowledges the event/warning/alarm currently displayed and the warning/alarm LED stops flashing. If available, the display will show the suggested action, press ENTER again to clear.

If there is another new event/warning or alarm the warning/alarm LED will continue to flash and this is then displayed, otherwise the display will revert to the original text from before the alarms/warnings/events occurred.

If there are warnings/alarms still present, but they are all acknowledged, then the corresponding LED remains continuously illuminated. The text indicating acknowledged warning/alarm conditions still present may be viewed in the Status menu, refer to status menu contents in *Status menu* on page 122. Some alarms such as 1.01 STOP ACTIVATED remain present until the pump is manually started from the PDT or front panel controls.

Once all warning/alarm conditions have gone away, then the corresponding LED is extinguished.

To avoid a build-up of out of date warnings, they are automatically acknowledged after 36 hours.

9.4 Menus

There are three menu buttons NORMAL, STATUS and SETUP described below.

NR in the data part of a parameter indicates no reading.

NP in the data part of a parameter indicates a parameter that is not present.

9.4.1 Normal menu

This menu is displayed when the PDT is first plugged into the pump, or accessed by pressing the NORMAL button. Up to four parameters are displayed. Scroll by pressing the UP/DOWN keys.

Table 29 Normal menu

Description	Typical display
Serial Number	S/N 1234567
Control Holder	NONE IN CONTROL
Dry Pump current	DP CURRENT 1.1 A
Booster current	MB CURRENT 1.1 A

By default, the four parameters displayed in the normal menu are as shown in *Table: Normal menu*. It is possible to change the parameters displayed, refer to *How to set up the PDT display* on page 133.

9.4.2 Status menu

Press the STATUS button to enter. Scroll by pressing the UP/DOWN keys. Press CANCEL to exit back to the Normal menu.

If a device is not fitted the associated parameters will not be displayed. Parameters displayed:

Table 30 Typical display

Description	Typical display	
Serial number	S/N 1234567	
Control holder	NONE IN CONTROL	
Dry pump current	DP CURRENT	1.1 A
Booster current	MB CURRENT	1.1 A
Green mode state	Green Mode STATE	Off
Inlet isolation valve open/closed state	ISOL VALVE	Open
Dry pump stator reference temperature	TCS REF	100 C
Dry pump temperature	DP TEMP	100 C
Dry pump exhaust stage temperature	DP EXH STG	63 C
Dry pump end cover temperature	DP E/C TEMP	100 C
Booster temperature	MB TEMP	100 C
Booster end cover temperature	MB EC TEMP	100 C
Nitrogen flow switch status	N2 Supply	OK
Dry pump power	DP POWER	1.1 kW
Booster power	MB POWER	1.1 kW
Dry pump speed in percent	DP SPEED	100 %

Description	Typical display	
Dry pump speed in Hz	DP SPEED	100 Hz
Booster speed in percent	MB SPEED	100 %
Booster speed in Hz	MB SPEED	100 Hz
Dry pump inverter temperature	DP INV TEMP	100 C
Booster inverter temperature	MB INV TEMP	100 C
Exhaust pressure	EXHAUST	5 PSI
Exhaust temperature	EXH PIPE TEMP	100 C
Water flow rate	WATER	11.1 l/m
Run hours	RUN HOURS	1000
Number of pump starts	PUMP STARTS	100
Time to stop (seconds)	TIME TO STOP	900
Active alarms and warnings		
Solvent soak	SOLVENTSOAK	Off
Dry pump clean	DP CLEAN	Off
Active strain gauge	ASG	3.4E+01 mbar
PT100 temperature	PT100 1	108 C
Pressure transducer	PR	105.0 kPa
PID auto tune status	PID TUNE	Normal

9.4.3 Setup menu

Press the SETUP button to enter. The menu title is shown at the top of the display. Scroll by pressing the UP/DOWN keys. Press ENTER to open a sub menu or CANCEL to exit back to Normal menu.

Table 31 PDT setup menu structure

Description	Display
Commands menu*	Command Menu...
Set sequences menu*	Set Sequences...
Display inverter fault history menu	Inv Fault Hist...
Software version display menu	S/W Version...
Display serial number	Serial Num...
Fit accessory menu*	Fit Accessory...
Edit IP configuration menu	IP Config...
Edit display attributes menu	Display Attr...
Set time and date	Set Clock...
Display pump type	Show pump type...

** This option requires a security code to access it.*

Each sub menu is described below.

9.4.4 Commands menu

Under the Setup menu. Scroll by pressing the UP/DOWN keys. Press ENTER to open a sub menu or CANCEL to exit back to the Setup menu. A security code is needed to enter the commands menus: 202.

Table 32 Commands menu

Commands menu
Inlet Isolation Valve (Open/Shut)
MB Pump (On/Off)*
Green Mode
Green Level
Solvent Soak
DP Clean
Gas Valves
PID Autotune
PID (On/Off)
2nd DP Speed
2nd MB Speed
Force control
Test Mode (On/Off)

** The PDT must be in control to perform these functions.*

Press the UP/DOWN keys to select the new settings and press ENTER to accept or CANCEL to exit back to the Commands menu.

9.4.5 Gas valves menu

Scroll by pressing the UP/DOWN keys. Press ENTER to open a sub menu or CANCEL to exit back to the Setup menu. Settings do not appear if they are not fitted.

Table 33 Gas valves menu

Gas valves menu
Set N_2 Seal
Set Gas Ballast
Set Inlet

Press the UP/DOWN keys to select on/off and press ENTER to accept or CANCEL to exit back to the Gas valves menu.

9.4.6 Set sequences menu

Under the Setup menu. Scroll by pressing the UP/DOWN keys. Press ENTER to open a sub menu or CANCEL to exit back to the Setup menu. A security code is needed to enter the set sequences menus: 202.

Table 34 Set sequences menu

Option	Text on PDT line 2	Options on PDT line 2 after pressing Enter
Warm up sequence	Warmup options...	See Warm up options menu
Booster start options	BP Start Options...	See Booster Pump Start options menu
Micro TIM options	Micro TIM...	See Micro TIM menu
Dry pump clean	DP Clean...	See Dry Pump Clean menu
Allow pump to go on-process when in warning	WarnOnProcess...	Enable/Disable
Ramped speed up on-process	OnProcessRamp...	See on-process Ramp menu
PID pressure control setup	PID...	See PID menu
Smart shutdown	Smart Stop...	See Smart Stop menu
Speed control options	Speed Control...	See Speed Control menu
Reset MicroTIM	Reset MicroTIM...	See Reset MicroTIM menu
Restore factory defaults	Default Reset...	See Default Reset menu

Press the UP/DOWN keys to select the new settings and press ENTER to accept or CANCEL to exit back to the Set sequences menu.

9.4.7 Warm up options menu

Scroll by pressing the UP/DOWN keys. Press ENTER to open a sub menu or CANCEL to exit back to the Set sequences menu.

Table 35 Warm up options menu

Option	Text on PDT line 2	Options on PDT line 2 after pressing Enter
Warm up Temperature set point	Setpoint temp...	Range 0-210 °C*
Auto Green Mode	Auto Green Mode...	Enable/Disable
Allow Cold on-process	ColdOnProcess...	Enable/Disable
Inlet purge on during warm up	Inlet Purge...	Enable/Disable
Automatically re-warm when in Green Mode	Auto Rewarm...	Enable/Disable

** Scroll through the options by pressing the UP/DOWN keys. Press ENTER to accept the new setting. Press CANCEL to exit back into the Warm up options menu.*

Press the UP/DOWN keys to select enable/disable and press ENTER to accept or CANCEL to exit back to the Warm up options menu.

9.4.8 Booster pump start options menu

Scroll by pressing the UP/DOWN keys. Press ENTER to open a sub menu or CANCEL to exit back to the Set sequences menu.

Table 36 Booster pump start options menu

Option	Text on PDT line 2	Options on PDT line 2 after pressing Enter
Booster start mode	BP Start Mode	Select from: Manual Time Delay
Booster controller if in Time Delay Mode	BP delay after..	Select from: Dry pump Inlet isolation valve
Booster start delay	BP start delay..	Range 1-200 seconds*

** Scroll through the options by pressing the UP/DOWN keys. Press ENTER to accept the new setting. Press CANCEL to exit back into the Booster pump start options menu.*

Press the UP/DOWN keys to select the new settings and press ENTER to accept or CANCEL to exit back to the Booster pump start options menu.

9.4.9 MicroTIM options menu

Scroll by pressing the UP/DOWN keys. Press ENTER to open a sub menu or CANCEL to exit back to the Set sequences menu.

Table 37 MicroTIM options menu

Option	Text on PDT line 2	Options on PDT line 2 after pressing Enter
Set MicroTIM Input 2	Input 2 ...	Select from: Green Mode Booster Isolation Valve PID Enable Second speed control
Set MicroTIM Output 4	Output 4 ...	Select from: Isolation Valve Warning Booster N_2 Flow Water Flow Exhaust Pressure Control status On Process State Semicon Outputs

Use the UP/DOWN arrow to change and enter to select.

9.4.10 DP clean menu

Scroll by pressing the UP/DOWN keys. Press ENTER to open a sub menu or CANCEL to exit back to the Set sequences menu.

Table 38 DP clean options menu

Option	Text on PDT line 2	Options on PDT line 2 after pressing Enter
Set clean speed	Set DP Speed...	Range 20 to 110 Hz*
Clean time	Clean Time...	Range 10 minutes to 60 minutes*
Automatically start on entering Green Mode	Start in Green Mode ...	Enable/Disable
Inlet purge open during clean cycle	Inlet Purge...	Enable/Disable
Inlet purge time after clean cycle	Purge Time	Range 0 minutes to 60 minutes*
Allow DP clean when pump is on process	Allow on Process	Enable/Disable
Automatically run DP clean during shutdown	Auto On Shutdown	Enable/Disable
Allow DP clean when pump is on process	Allow on Process	Enable/Disable
Automatically run DP clean during shutdown	Auto On Shutdown	Enable/Disable

** Scroll through the options by pressing the UP/DOWN keys. Press ENTER to accept the new setting. Press CANCEL to exit back into the DP clean menu.*

Press the UP/DOWN keys to select enable/disable and press ENTER to accept or CANCEL to exit back to the DP clean menu.

9.4.11 Warn on-process menu

Press the UP/DOWN keys to select enable/disable and press ENTER to accept or CANCEL to exit back to the Set sequences menu.

9.4.12 On-process ramp menu

Scroll by pressing the UP/DOWN keys. Press ENTER to open a sub menu or CANCEL to exit back to the Set sequences menu.

Table 39 On-process ramp options menu

Option	Text on PDT line 2	Options on PDT line 2 after pressing Enter
Time between speed step changes	Ramp Time...	Range 0 - 3600 seconds in 60 second steps
Size of speed step changes	Ramp Step...	Range 5 to 110 Hz in Hz steps

Scroll through the options by pressing the UP/DOWN keys. Press ENTER to accept the new setting. Press CANCEL to exit back into the On-process ramp menu.

9.4.13 PID menu

Scroll by pressing the UP/DOWN keys. Press ENTER to open a sub menu or CANCEL to exit back to the Set sequences menu.

Table 40 PID options menu

Option	Text on PDT line 2	Options on PDT line 2 after pressing Enter
PID enable/disable	Enable/Disable...	Enable/Disable
Pressure setpoint	Target Pressure	Range 1 to 10000 Pa*
PID operating mode	Operating mode...	Manual/Automatic
PID Tuning Parameters	PID Parameters...	See PID Parameters menu
Gauge used for PID	PID Gauge...	Active Gauge/Auxiliary Gauge/Pressure (4-20 mA)

** For each digit press the UP/DOWN keys to set the digit then press ENTER to accept and move to the next digit or CANCEL to move back to the previous digit. Pressing ENTER at the end of the line will accept the new setting. Pressing CANCEL at the start of the line will cancel and exit back to the PID menu.*

Press the UP/DOWN keys to select enable/disable and press ENTER to accept or CANCEL to exit back to the PID menu.

9.4.14 PID parameters menu

Scroll by pressing the UP/DOWN keys. Press ENTER to open a sub menu or CANCEL to exit back to the PID menu.

Table 41 PID parameters options menu

Option	Text on PDT line 2	Options on PDT line 2 after pressing Enter
Time constant	Time Constant...	Range 0.01 - 10 seconds
Proportional constant	Kc...	Floating point number
Integral constant	Ti...	Floating point number
Differential constant	Td...	Floating point number

For each digit press the UP/DOWN keys to set the digit then press ENTER to accept and move to the next digit or CANCEL to move back to the previous digit. Pressing ENTER at the end of the line will accept the new setting. Pressing CANCEL at the start of the line will cancel and exit back to the PID parameters menu.

9.4.15 Smart stop menu

Scroll by pressing the UP/DOWN keys. Press ENTER to open a sub menu or CANCEL to exit back to the Set sequences menu.

Table 42 Smart stop options menu

Option	Text on PDT line 2	Options on PDT line 2 after pressing Enter
Smart stop enable/disable	Enable/Disable...	Enable/Disable
Time for pump to stop	Stop time...	Range 0 - 3600 seconds in 60 second steps*
Size of speed step changes	Step size...	Range 20 to 110 Hz*
Temperature to stop pump once reached	Setpoint...	Range 0-210 °C*
Time after temperature is reached before pump stops	Settle time...	Range 1-200 seconds*

** Scroll through the options by pressing the UP/DOWN keys. Press ENTER to accept the new setting. Press CANCEL to exit back into the Smart stop menu.*

Press the UP/DOWN keys to select enable/disable and press ENTER to accept or CANCEL to exit back to the Smart stop menu.

9.4.16 Speed control options menu

Scroll by pressing the UP/DOWN keys. Press ENTER to open a sub menu or CANCEL to exit back to the Set sequences menu.

Table 43 Speed control options menu

Option	Text on PDT line 2	Options on PDT line 2 after pressing Enter
Set speed control dry pump	Dry pump...	Select from: Normal/PID External Voltage SIM protocol Second speed
Set speed control booster	Booster...	Select from: Normal External Voltage SIM protocol Second speed
Set the second speed	Second Speed...	Range 20 - 110 Hz*

** Scroll through the options by pressing the UP/DOWN keys. Press ENTER to accept the new setting. Press CANCEL to exit back into the Speed control menu.*

9.4.17 Reset MicroTIM

Empties the MicroTIM configuration set storage of any configurations that have been loaded there.

9.4.18 Default reset

Resets all of the non-volatile configuration settings on the pump (for example: delays, temperature setpoints and thresholds) to their default factory-setting values for that pump type.

9.4.19 Display Inverter Fault History (DP Inv Fault Hist) menu

Under the Setup menu. Scroll by pressing the UP/DOWN keys. Press ENTER to open a sub menu or CANCEL to exit back to the Setup menu.

Table 44 Fault history menu

Fault history menu
DP Inv Fault Hist (Dry Pump Inverter Fault History)
MB Inv Fault Hist (Booster Inverter Fault History)

Each inverter fault history contains up to 32 entries, each contains one alarm and one warning, where 1 is the most recent. Scroll by pressing the UP/DOWN keys. Press CANCEL to exit back to the Inverter fault history menu.

9.4.20 Software version display menu

Under the Setup menu. Scroll through the software version loaded in the processors by pressing the UP/DOWN keys. Press CANCEL to exit back to the Setup menu.

Table 45 Software display menu

Software display menu
Executive...
Support...
DP Inverter...
DP Inverter 2...
MB Inverter...
DP Inv Params...
DP Inv2 Params...
MB Inv Params...

9.4.21 Display serial number

Under the Setup menu. View the pump serial number. Press CANCEL to exit back to the Setup menu.

9.4.22 Fit accessory menu

Under the Setup menu. Scroll by pressing the UP/DOWN keys. Press ENTER to open a sub menu or CANCEL to exit back to the Setup menu. A security code is needed to enter the Fit accessory menus: 538.

Table 46 Table: Accessory menu

Accessory	Parameter
Isol Valve...	(Inlet isolation valve)
Water Sensor...	
Active gauge...	
N2 Flow Sensor...	(Purge gas flow)
Exh Pressure...	(Exhaust Pressure Sensor)
DP Clean...	
Auxiliary gauge...	Choice of Voltage/Strain Gauge/Pirani Gauge
PT100 1...	
PT100 2...	
Pressure...	
Pressure 2...	
Max pressure 1...	xxxxmbar
Max Pressure 2...	xxxxmbar
Gas Ballast...	(Additional gas ballast for the GXS450 and GXS750 systems fitted with the medium duty gas module only)

For an accessory, press the UP/DOWN keys to select Fitted or Not Fitted and press ENTER to accept or CANCEL to exit back to the Commands menu.

Note:

The inlet isolation valves additionally have an option of fitted no feedback for use where there are no position feedback switches fitted to the inlet isolation valve.

9.4.23 IP configuration menu

Under the Setup menu. Scroll by pressing the UP/DOWN keys. Press ENTER to open a sub menu or CANCEL to exit back to the Setup menu.

Table 47 Configuration menu

Configuration	Display
Host_Name...	(display only)
DHCP Enable...	(Enabled / Disabled)*
IP Address...	(xxx.xxx.xxx.xxx)†
Address Mask...	(xxx.xxx.xxx.xxx)†
Gateway...	(xxx.xxx.xxx.xxx)†
DNS Server...	(xxx.xxx.xxx.xxx)†
NTP Server...	(display only)
SMTP Server...	(display only)
MAC Address...	(display only)

Configuration	Display
Domain Name...	(display only)

** Press UP/DOWN keys to select Enabled or Disabled and press ENTER to accept or CANCEL to exit back to the IP Configuration menu.*

† For each digit setting press the UP/DOWN keys to set the digit, press ENTER to accept and move to the next digit or CANCEL to move back to the previous digit. Pressing ENTER at the end of the line will accept the new setting and exit back to the Set Clock menu. Pressing CANCEL at the start of the line will cancel and exit back to the IP Configuration menu.

Display only items press CANCEL to exit back to the IP configuration menu.

9.4.24 Display menu

Under the Setup menu. Scroll by pressing the UP/DOWN keys. Press ENTER to open a sub menu or CANCEL to exit back to the Setup menu.

Table 48 Display menu

Display
Units...
Normal display (Selects the parameters displayed in Normal)
Auto Scroll
Scroll Delay

UNITS (units to display)

Scroll by pressing the UP/DOWN keys. Press ENTER to open a sub menu or CANCEL to exit back to the Display attributes menu.

Table 49 Units

Parameter	Key
Pressure...	(PSI/kPa/mbar)
Temperature...	(Centigrade/Farenheit/Kelvin)
Speed...	(rpm/Hz)
Active Gauge...	(mBar/Torr/kPA)

In each option, scroll through the units available by pressing the UP/DOWN keys. Press ENTER to select the displayed units or CANCEL to exit back to the Units menu.

SELECT LINE (Normal display selection menu)

Scroll by pressing the UP/DOWN keys. Press ENTER to open a sub menu or CANCEL to exit back to the Display attributes menu.

Table 50 Selection menu

Parameter
Top Page 1...
Bottom Page 1...
Top Page 2...

Parameter
Bottom Page 2...

In each option, the select parameter menu is opened, scroll through the parameters by pressing the UP/DOWN keys. Press ENTER to select the parameter for display or CANCEL to exit back to the Select line menu.

9.4.25 Set clock

Under the Setup menu. Press ENTER to change the date and time displayed or press CANCEL to exit back to the Setup menu.

For each digit setting press the UP/DOWN keys to set the digit, press ENTER to accept and move to the next digit or CANCEL to move back to the previous digit. Pressing ENTER at the end of the line will accept the new setting and exit back to the Set Clock menu. Pressing CANCEL at the start of the line will cancel and exit back to the Setup menu.

9.5 How to set up the PDT display

The configuration options for the PDT are stored in the PDT itself and are not associated with the pump that the PDT is connected to. This means the user can transfer a PDT between pumps and keep the same settings. It also means that different units could be displayed on two PDTs connected to the same pump.

The following PDT menus are used to configure the PDT display.

Figure 57 PDT menu items

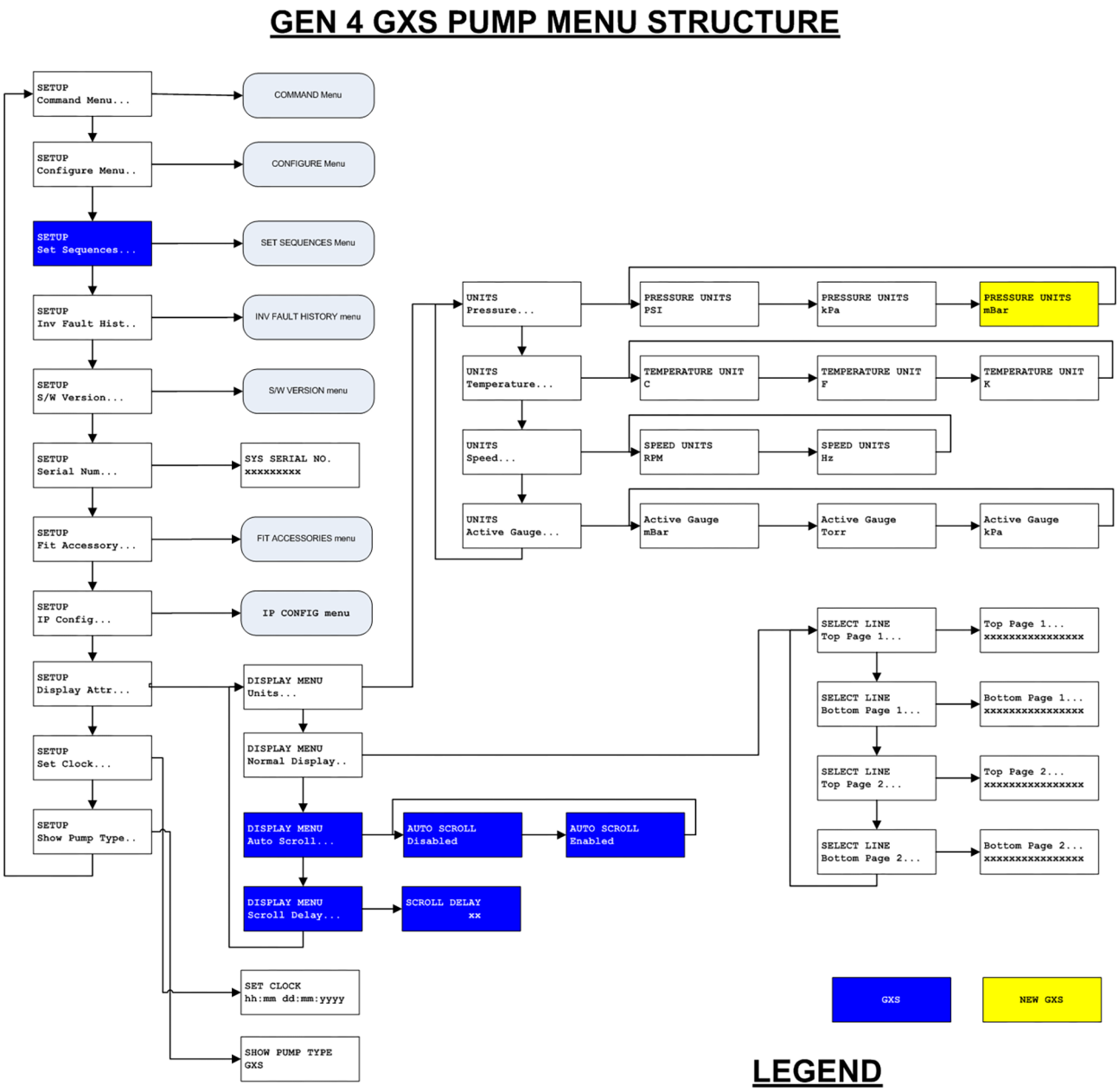

9.5.1 Setting the status screen to automatically scroll

The status display can be made to automatically scroll through its display items using the auto scroll menu item. The delay between refreshes is set using the scroll delay menu item.

9.5.2 Change the normal menu display

The normal display on the PDT can be customised to display any status item. The normal display consists of two pages each of two lines so there are four configurable lines. When in the select parameter menu the bottom line of the display shows what will be displayed if that option was selected.

9.6 How to configure the pump warm-up options

By default the pump performs an intelligent warm-up cycle to a temperature setpoint so that the pump is warm before it is allowed to be on-process. Once the pump reaches the temperature set point it automatically goes on-process.

If the pump is no longer to be on-process, a choice can be made to either stop the pump or put it into the green mode/standby mode.

If the pump is in the Green mode/standby mode it can either be put on-process or stopped.

It is possible to change the behaviour of the pump using the PDT. The following menus are used by the PDT to configure warm-up.

Figure 58 Warm-up PDT menu items

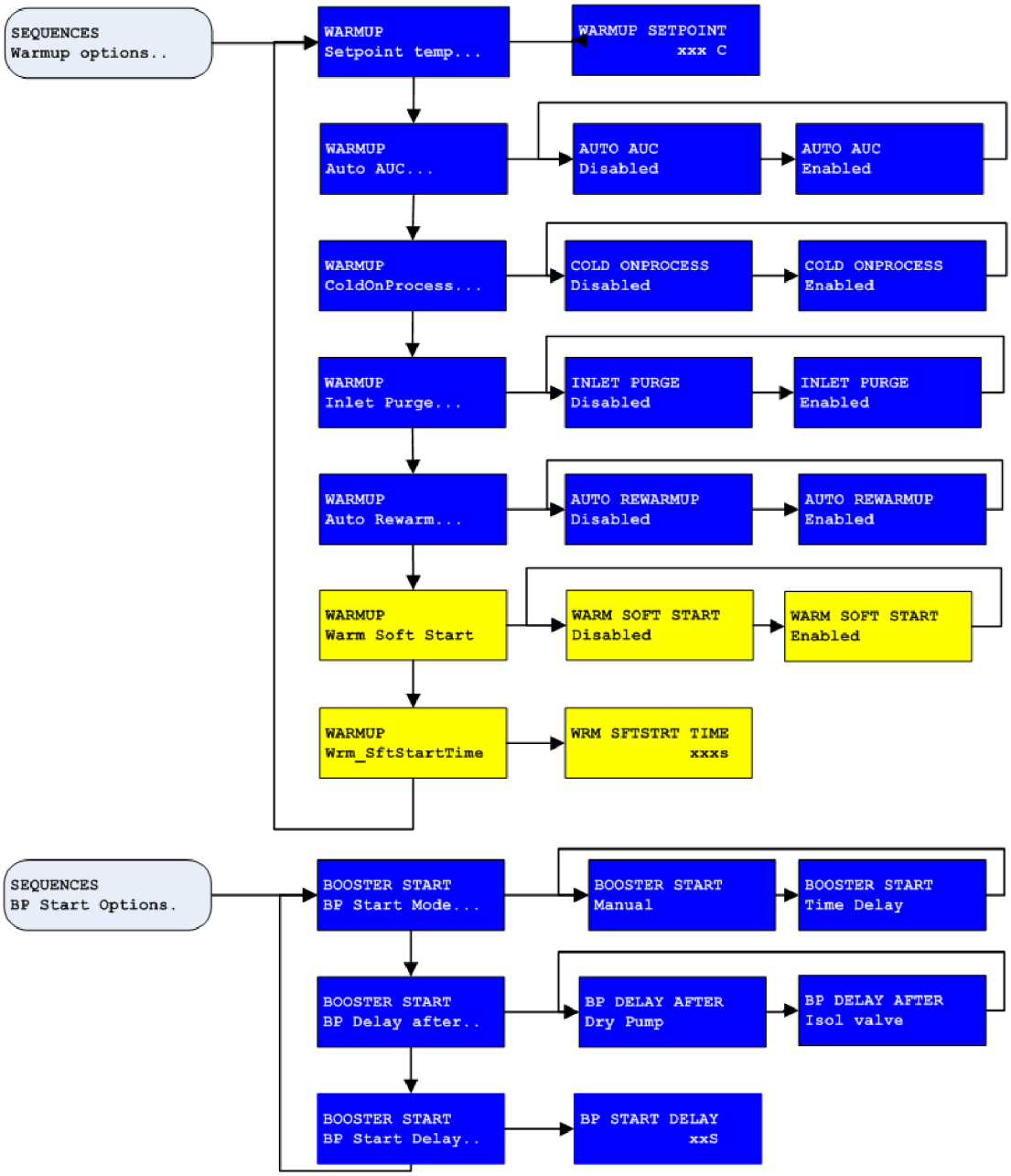

9.6.1 Lowering the warm-up temperature

Use the warmup setpoint temp menu item and decrease the warm-up set point to the desired temperature. The minimum temperature allowed is 0 °C.

9.6.2 Disabling the warm-up cycle

It may be required for the pump to skip the warm-up cycle and go directly on-process once it has reached full speed. There are two ways to achieve this:

- Enable COLD ONPROCESS
- Adjust the WARMUP Setpoint temp set point to below ambient temperature.

9.6.3 Increasing the warm-up temperature

Use the Warmup setpoint temp menu item and increase the warm-up set point to the desired temperature to suit your application.

Note:

The maximum temperature allowed for warmup setpoint temperature is above the alarm limit for the pump so if the temperature is set too high the pump will never warm-up. Changing the warm-up temperature does not change the pump's water cooling operation. This is fixed by us and can only be changed by a downloadable configuration.

9.6.4 Stop the pump going on-process when it is warm

The pump can be configured to automatically go into the Green mode/standby mode when it is warm instead of going on-process. To do this, go to auto Green Mode menu and disable auto Green Mode.

Note:

If the pump is controlled by a tool interface then the pump will follow the state of the on-process line.

9.6.5 Stop the pump automatically warming up when in Green mode/standby mode

If the pump is running in the Green mode/standby mode and its internal temperature drops below the warm-up set point then by default the pump will automatically perform a warm-up cycle. This could result in the pump speeding up and slowing down over a period of time.

If the application does not require the pump to remain above the warm-up set point while in the Green mode/standby mode then automatic re-warming can be disabled using the Warmup auto rewarm menu item.

9.6.6 Turn the inlet purge on during warm-up

A pump can be made to warm-up more quickly by adding inlet purge during the warm up cycle. This is enabled using the Inlet purge menu item.

Note:

Systems with the light-duty gas module do not have inlet purge so it is not possible to use this feature.

9.6.7 Allow a pump to go on-process with a warning

By default a pump is prevented from going on-process if a warning is present. This can be disabled using the Warn onprocess menu item which can be found by going to the Setup menu and selecting the Set sequences menu.

9.6.8 Warm soft start

This enables a feature where, once warmed-up to go on-process, the pump is returned to the off-process speed for a configurable time ("WrmSftStartTime") before it goes on process.

9.7 How to configure the booster pump behaviour

By default the booster pump starts a set time after the dry pump starts. The booster stops at the same time as the dry pump.

It is possible to change the behaviour of the booster pump so that it can be controlled manually or so that the time delay can be changed or that it starts after the inlet isolation valve is open.

Note:

A pump with a tool interface can control the booster independently. Refer to Configuring the channel 2 input on page 157 for details on configuring this behaviour.

The following menus are used by the PDT to configure the booster:

Figure 59 Booster PDT menu configuration items

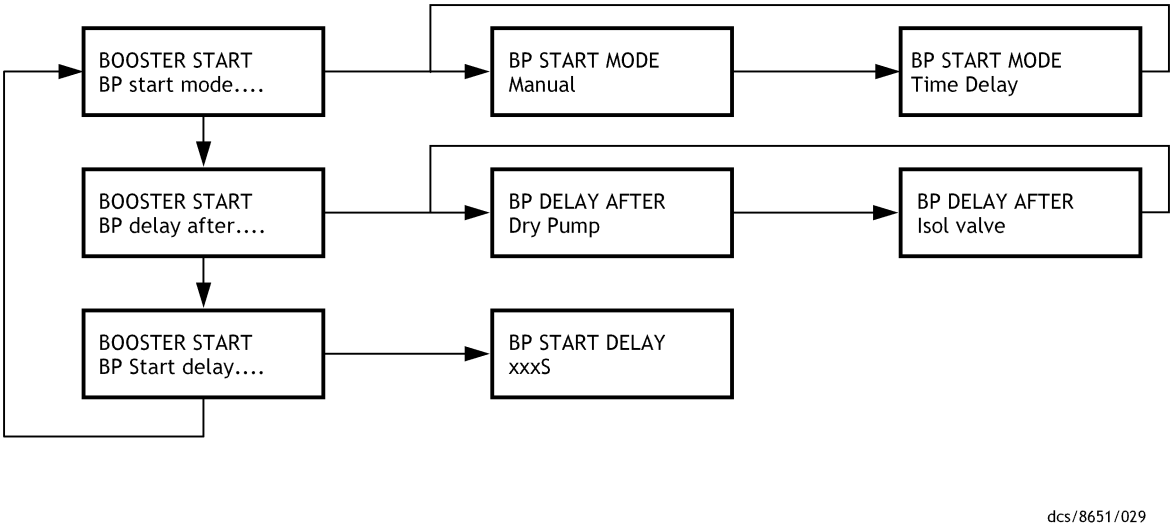

9.7.1 Setting the booster to manual operation

The booster can be set to manual mode using the BP Start mode menu item.

1. From the SETUP menu, scroll down and select the Set Sequences menu.
2. Scroll down and select BP Start Options.
3. Select BP Start Mode...
4. Select Manual.

The booster can then be started and stopped using the MB menu item from the Commands menu. Refer to *How to run the booster independently from the dry pump* on page 158.

Note:

If booster is manually controlled and dry pump is stopped then the booster will continue running.

9.7.2 Changing the booster time delay

The time delay for starting the booster in automatic mode can be configured using the BP start delay menu item to between 1 and 200 seconds.

Note:

It is not recommended to set the delay to less than 20 seconds when the booster is starting after the dry pump.

9.7.3 Setting the booster to start when the inlet isolation valve is open

To reduce energy consumption the booster can be configured to only run when the inlet isolation valve is open. The inlet isolation valve automatically opens when the dry pump is on-process and is closed in Green mode/standby mode.

To configure the booster to only be on when the inlet isolation valve is open, use the BP delay after menu item and set the option to Isol valve.

9.8 How to configure pump behaviour

9.8.1 Smart Stop

The pump has a configurable intelligent shutdown behaviour mode called Smart Stop. When Smart Stop is enabled, the speed of the pump is ramped down gradually to allow the pump to cool down before stopping. The intention is to allow condensible process chemicals to be pumped away without jamming the pump mechanism.

The following flow chart shows how Smart Stop operates:

Figure 60 Smart Stop flow chart

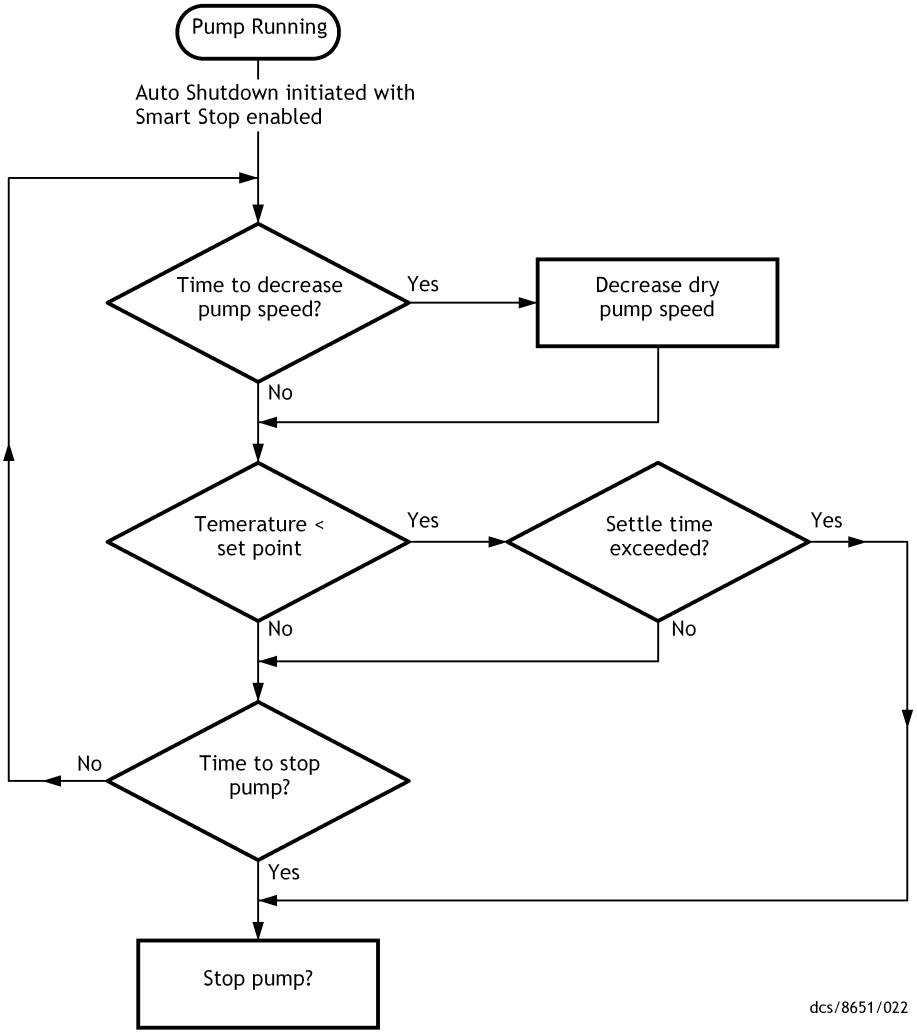

The following menus are used by the PDT to configure Smart Stop:

Figure 61 Smart Stop PDT menu configuration items

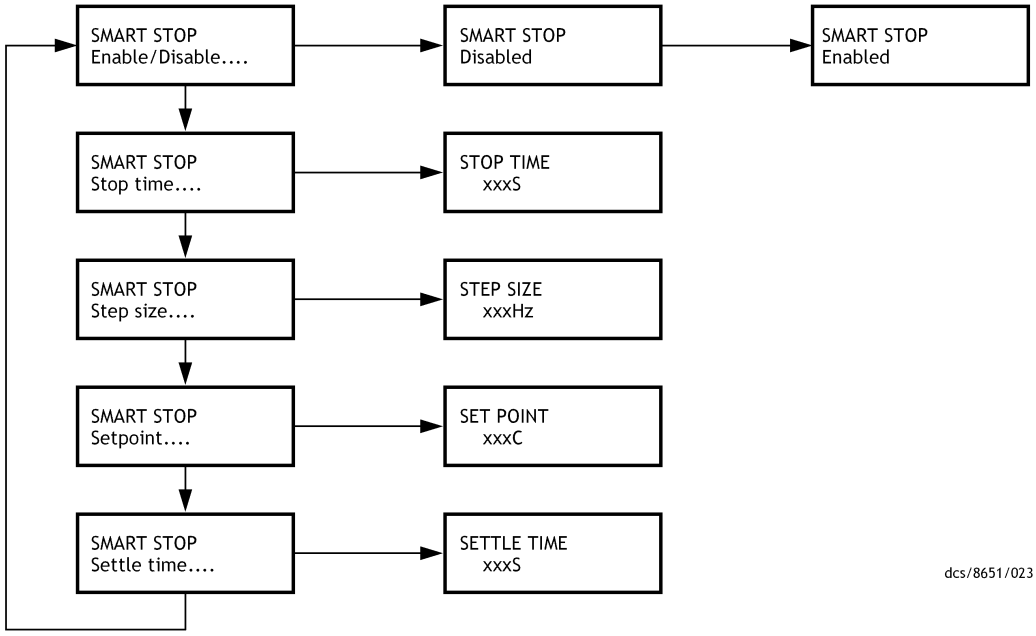

- Smart Stop is enabled and disabled using the enable/disable menu item.
- The maximum time that the pump will run while shutting down is set using the Stop time menu item.
- The size of the dry pump speed reductions is configured using the Step size menu item. The time between speed step reductions is automatically calculated by the software based on the size of the speed step reductions and the maximum time the pump will run.
- The pump can be triggered to stop when its internal temperature reaches a certain set point. Select the Setpoint menu to configure the set point temperature.
- The pump can be triggered to stop a certain time period after it has cooled to the set point temperature. Select the Settle time menu to adjust the time period.

9.8.2 How to configure ramped speed increase

The pump has a configurable intelligent on-process behaviour mode called on-process ramp. When the on-process ramp is enabled, the speed of the pump is ramped up gradually when accelerating from the green mode/standby speed to the process speed. This gradual acceleration can prevent a large disturbance to the process load which could result in a slug of process material being drawn into the pump.

Note:

The on-process ramp is only effective if the Green mode/standby speed of less than full speed has been set. Contact us for more information about configuring the Green mode/standby speed.

The following menus are used by the PDT to on-process ramp:

Figure 62 On-process ramp PDT menu configuration items

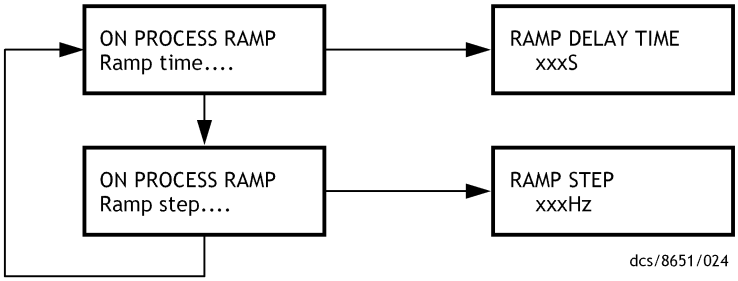

On-process ramp is enabled by setting a ramp delay time greater than zero. This time is the time delay between the pump speed increases. The ramp step size determines the size of each step. The pump speed will not exceed the maximum allowed pump speed.

9.9 How to set up the DP clean

The DP clean set sequence can be used to clean the dry pump of systems that are fitted with the high flow purge and solvent flush kit.

Before using DP clean, ensure that the high flow purge and solvent flush kit is set up as described in *High flow purge and solvent flush set up* on page 51. Also, refer to *Dry pump clean* on page 63.

The DP clean process is run while the dry pump is in Green mode/standby mode. By default, the DP Clean runs for 20 minutes with the dry pump running at 80 Hz with no inlet purge.

The following flow chart shows the functional behaviour of dry pump clean:

Figure 63 Dry pump clean flow chart

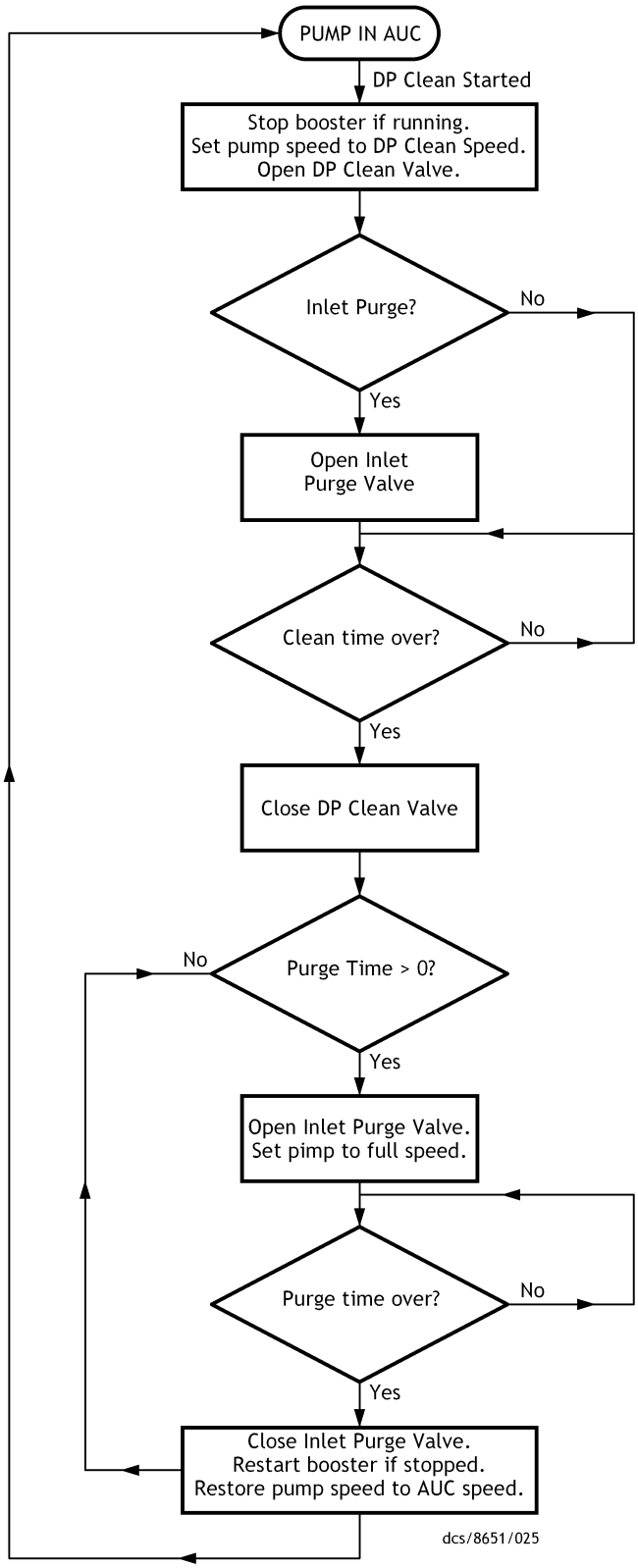

The following menus are used by the PDT to configure the dry pump clean:

Figure 64 Dry pump clean PDT menu configuration items

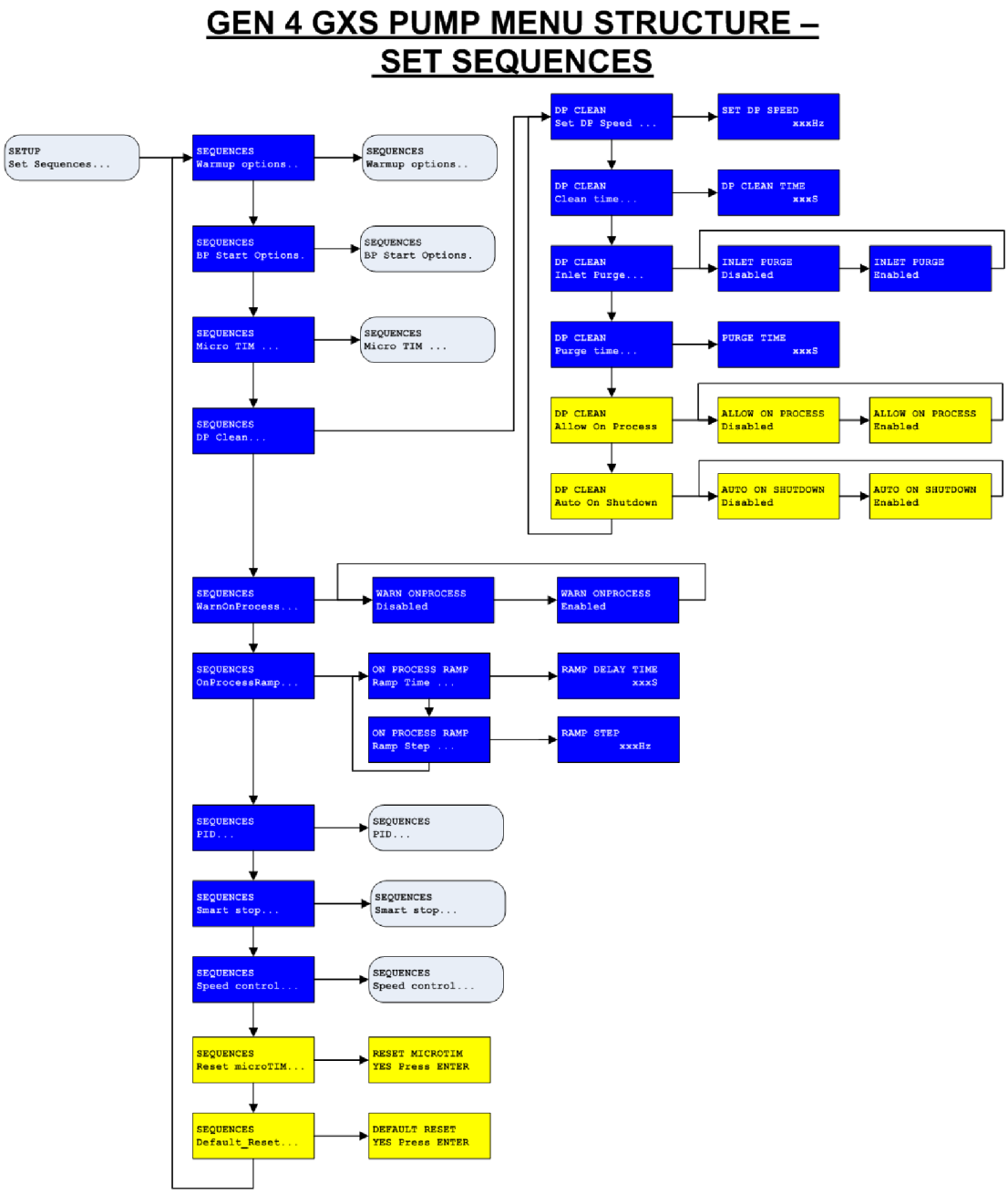

9.9.1 Changing the dry pump speed during the clean operation

Use the Set DP speed menu item to change the dry pump speed during the clean cycle. It is not recommended to increase the pump speed if solvent is used. If the dry pump clean is just using air then setting the speed to 110 Hz would increase the efficiency of the cleaning cycle.

9.9.2 Changing the clean cycle time

The time period for the dry pump clean cycle can be changed using the DP clean time menu item.

9.9.3 Automatically initiating a clean cycle when the pump goes off-process

The dry pump can be configured to automatically start the dry pump clean cycle when it goes off-process. This is useful if the pump requires regular cleaning on a particularly dirty process. This mode is enabled by setting enable in the Start in the Green mode menu item.

9.9.4 Turn the inlet purge on during the clean cycle

To increase the gas flow through the dry pump during a clean cycle, it is possible to configure the inlet purge gas valve to be open during the clean cycle. This mode is enabled by setting enable in the Inlet purge menu item.

9.9.5 Have inlet purge cycle after clean cycle

For some processes it is desirable to ensure that the pump is both fully dry and internally warm after a clean cycle has been completed. The pump can be configured to have an optional inlet purge cycle where the pump runs at full speed. To enable this option, use the Purge time menu item and set the purge time to a value greater than zero.

9.9.6 Allow on process

Allows a DP Clean to start while the pump is on-process.

9.9.7 Auto on shut down

When enabled, a DP clean cycle occurs after every pump auto shutdown.

9.10 How to control the pump speed

By default, both the dry pump and booster runs at full speed while the pump is on-process. For some applications, it is advantageous to adjust the speed of the pump while it is on-process so the system has the capability to run both the dry pump and booster at different speeds.

The speeds of the dry pump and booster can be controlled using a number of different methods as shown in *Table: Speed control sources*.

Table 51 Speed control sources

Speed control sources:
Normal speed (default)
External voltage 0-10 V input*
SIM protocol over one of the serial RS232 interfaces
SIM protocol over the Ethernet interface
As a second speed controlled from the PDT*
As a second speed controlled from the MCM MicroTIM*

Speed control sources:
Profibus interface

** Only one of the pumps (dry pump or booster) can be controlled by this at one time, although the other pump can be controlled by a different source.*

Note:

The system also has a built-in PID controller. Refer to *How to use the PID pressure control on page 148* *for more information.*

The PDT menus for speed control are shown in *Figure: Speed control menu items*.

Figure 65 Speed control menu items

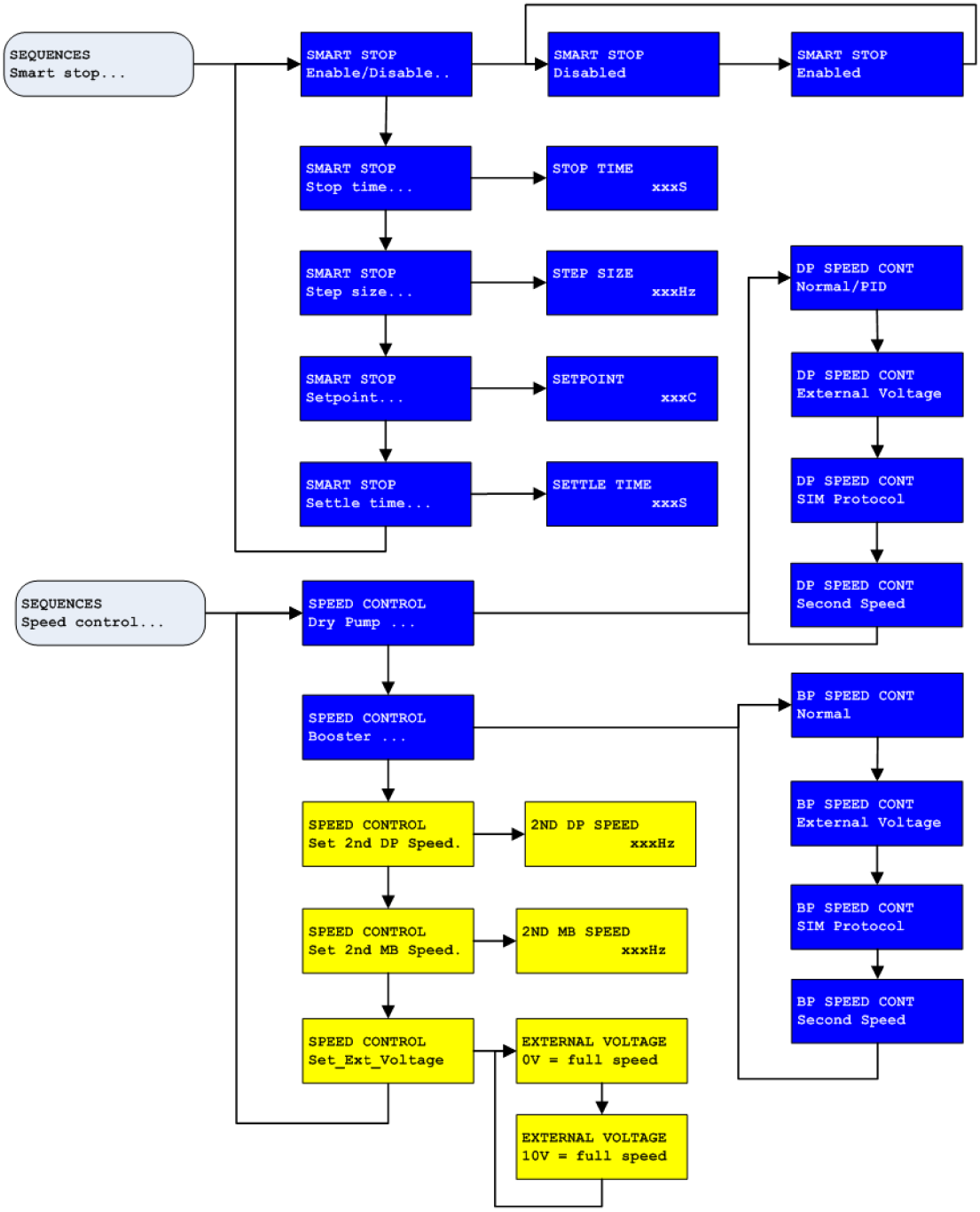

9.10.1 Normal speed

The full speed settings for the booster and dry pump are set by us when the pump is manufactured. If a lower full speed is required then this can be set using a downloadable configuration. Configurations can be downloaded using our Configuration Download Utility (CDU). Please contact our application specialists to discuss your requirements.

By default, dry pump and booster speed control are set to normal, meaning that the pumps will run at their configured full speeds.

9.10.2 External voltage

The auxiliary gauge input on the rear of the system (available as an optional accessory, shown in *Figure: The controls/connectors on the rear of the pump (system with rear exhaust and castors/levelling feet fitted)*, item 14) can be used as a 0-10 V speed control for either the dry pump or the booster. The connector is a standard RJ45 (refer to *Figure: Pin numbers on the auxiliary gauge interface*) to identify the pin numbers. Use the pin 3 for the external voltage signal and pin 5 for signal common.

Figure 66 Pin numbers on the auxiliary gauge interface

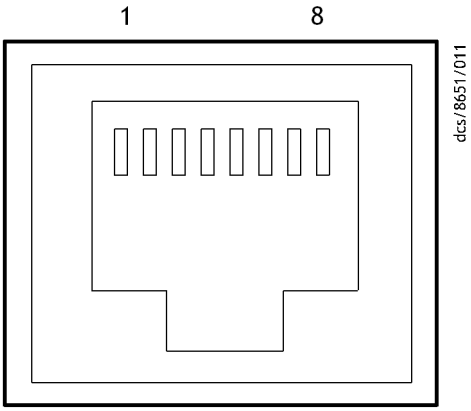

The 0-10 V input is scaled linearly and may be configured such that the pump runs at 100% speed when the input voltage is either 0 V or 10 V. The pump speed may be decreased to 20 Hz by increasing/decreasing the supply voltage depending on the external voltage speed control configuration.

Note:

If the cable becomes disconnected, the pump will run at full speed.

To enable the external voltage as the speed control source, use the PDT to select the external voltage for the appropriate pump.

9.10.3 SIM protocol

It is possible to independently control the speed of both the dry pump and the booster using the built-in SIM protocol. Refer to the SIM Protocol Manual (P411-00-200) for details of the commands to use.

The system supports the SIM protocol by both the Ethernet and the serial ports. Refer to *How to set up the Ethernet port* on page 151 for information about setting up the

Ethernet interface and *How to use SIM protocol with a serial port* on page 155 for the details of how to use the SIM protocol with a serial port.

9.10.4 Second speed control

A second speed setting can be configured using the PDT and used to control the speed of either the booster or the dry pump.

The second speed setting can be enabled and disabled using the PDT from the Command menu, using the SIM protocol or the MCM MicroTIM configured for speed control. Refer to *How to set up the MCM MicroTIM using the PDT* on page 156 for the information on how to configure the MicroTIM.

9.10.5 Profibus interface

It is possible to independently control the speed of both the dry pump and the booster using the optional Profibus interface, available as an accessory. For more information, refer to the Profibus instruction manual D39753880. The GSD file is available with us.

If using Profibus, ensure that the speed control is set to normal (default setting) for both pump and booster.

9.11 How to use the PID pressure control

The pump has a built-in PID pressure control and auto tune feature that can adjust the dry pump speed when the pump is on-process so that the pressure reading of the pressure sensor matches the supplied PID setpoint. We recommend that the PID is auto tuned after the PID setpoint is adjusted.

Figure 67 The simplified system diagram

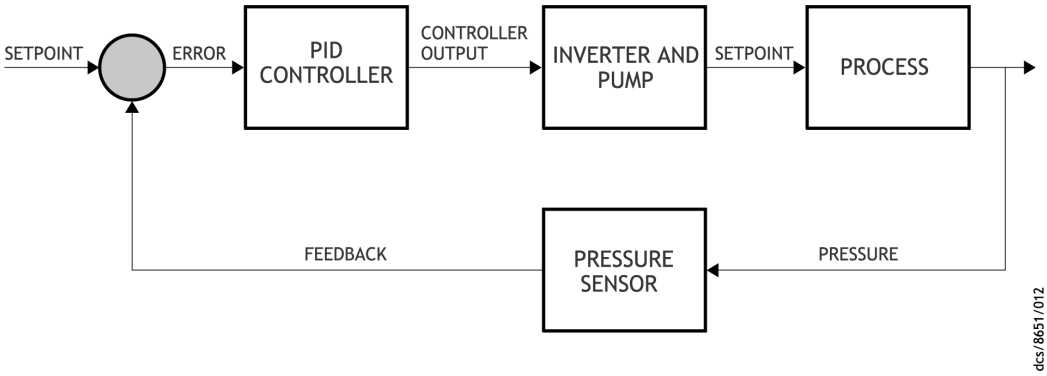

Classical PID equation

$$u(t) = K_c \left(e(t) + \frac{1}{T_i} \int_0^t e(\tau)\, d\tau + T_d \frac{de(t)}{dt} \right) + b$$

Where:

u is the control signal.

e is the control error.

K_c is the gain for a proportional controller.

T_i is the parameter that scales the integral controller.

T_d is the parameter that scales the derivative controller.

t is the time taken for error measurement.

b is the set point value of the signal, also known as bias or offset.

On the pump, the *Kc*, T_i and T_d parameters and the time constant can either be set by the user or the pump can perform an auto tune that calculates these parameters based on the response of the system at the setpoint pressure.

The pump PID pressure control sequence is designed to work with our strain gauge or active Pirani gauge (available as accessories). Due to inaccuracies in the gauges, we do not recommend trying to control below 20 mbar with a strain gauge. Refer to *Using a different gauge* on page 149 to use a different pressure sensor.

The following menus are used by the PDT to configure and use the PID functionality.

Figure 68 PID PDT menu items

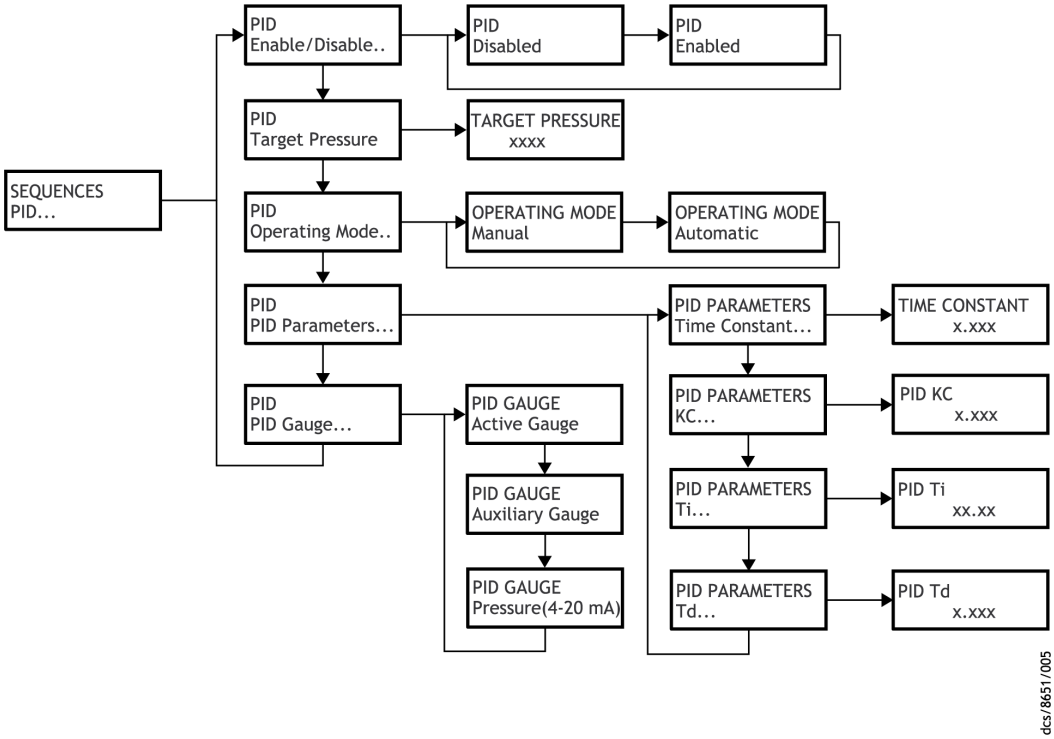

To set up the PID, follow these steps:

9.11.1 Fit and configure the pressure sensor

1. Fit the auxiliary gauge cable accessory by following the instructions given in the installation manual supplied with the accessory.
2. Physically fit the active strain gauge or active Pirani gauge to a convenient port on the process chamber.
3. Connect the gauge into the auxiliary gauge connector on the back panel. (Refer to *Figure: The controls/connectors on the rear of the pump (system with rear exhaust and castors/levelling feet fitted)*, item 14).
4. From the Fit accessory menu choose Auxiliary Gauge and then select appropriate gauge from the list.
5. From the Setup menu select Set sequences.
6. From the Sequences menu select PID....
7. From the PID menu select PID gauge...
8. From the PID gauge menu select Auxiliary gauge.

You can also use a different gauge as the PID gauge. Refer to *Using a different gauge* on page 149.

9.11.2 Using a different gauge

It is possible to configure the PID settings so that a different pressure gauge is used as the PID gauge.

If our Active Accessories Module (AAM) is fitted to the pump (available as an accessory, refer to *Accessories* on page 77) an active gauge can be connected to it and used the same as a PID gauge.

1. Fit the gauge to an appropriate port on your system.
2. Connect the gauge to the AAM.
3. From the Fit accessory menu select Active gauge to Fitted.
4. From the Setup menu select Set sequences.
5. From the Sequences menu select PID....
6. From the PID menu select PID gauge...
7. From the PID gauge menu select Active gauge.

A pressure gauge can also be used that has a 4-20 mA signal output. To use a gauge of this type, a pressure input cable (4-20 mA) and associated connector kit will need to be purchased which are available as accessories. Refer to *Accessories* on page 77.

1. Fit the pressure input cable accessory following the instructions given in the installation manual supplied with the accessory.
2. Fit the connector kit onto the cable on the pressure gauge.
3. Connect the gauge to the pressure input connection on the rear of the system. Refer to *Figure: The controls/connectors on the rear of the pump (system with rear exhaust and castors/levelling feet fitted)*, item 14.
4. From the Fit accessory menu select Pressure to Fitted.
5. From the Setup menu select Set sequences.
6. From the Set sequences menu select PID...
7. From the PID gauge menu select Pressure (4-20mA).

9.11.3 Set the pump into green mode

1. Start the dry pump using the PDT and let it warm up.
2. Check on the status display that there is a pressure reading for "AG x.xxExx mbar" and that the reading is what you expect for the chamber.
3. Set the system into Green mode using the Commands menu option.

9.11.4 Enable the PID

1. From the Setup menu select Set sequences.
2. From the Sequences menu select PID.
3. From the PID menu select enable/disable and then set PID to enable.

9.11.5 Set the PID target pressure set point

From the PID menu select Target pressure and enter the desired control pressure in Pa. For each digit of the target pressure value press the UP/DOWN keys to set the digit then press ENTER to accept and move to the next digit or CANCEL to move back to the previous digit. Pressing ENTER at the end of the line will accept the new setting. Pressing CANCEL at the start of the line will cancel and exit back into the PID menu.

The PID target pressure setpoint can also be configured using a voltage signal. For further details please contact us.

9.11.6 Test the PID control

1. If the booster is under manual control, ensure that it is switched on and running.
2. Turn the Green mode off from the Command menu.
3. PID should now start automatically. If it does not start to control the inlet pressure use the PDT and go to: Setup/Command/PID/On.

9.11.7 Auto tune the PID

The PID auto tune should not be used.

9.11.8 Manually tuning the PID

Use the following default PID parameters:

Tc = 1

Kc = 0.01 (increasing the value results in a faster time to target pressure. 0.02 is generally the largest value required)

Ti = 50 (decreasing the value results in a faster time to target pressure. 20 is generally the smallest value required)

Td = 0.0001

Do not change Tc or Td

PID parameters are accessed using the PDT - go to Setup/Set sequences/PID/PID parameters.

9.11.9 Turning PID on and off when on-process

The MCM MicroTIM or the PDT can be used to turn the PID on and off when the pump is on-process by configuring the PID to manual operating mode. This can be useful when a pump down to base pressure is required before pressure control is initiated.

1. From the PID menu, select Operating mode...
2. From the Operating mode menu, select Manual.

Refer to the MCM MicroTIM manual and *How to set up the MCM MicroTIM using the PDT* on page 156 for the information about using the MCM MicroTIM to enable PID.

9.12 How to set up the Ethernet port

The pump has a single 10 baseT Ethernet port that can be configured in either static address mode or DHCP mode. There are a variety of protocols that can be run over the Ethernet port including FabWorks EtherNim, SIM and E54 Modbus.

The SIM protocol is the only protocol available for users. The manual for the SIM protocol is P41100200. If the Ethernet port is to be used with different protocols then contact us.

Before the Ethernet connection is used, it requires a valid IP address. Set the IP address using the PDT. Both static IP addressing and DHCP dynamic addressing are supported by the pumps.

Note:

If the pump is set to DHCP mode it will not be visible through a router. If operation through a router is required then use static address mode. The pump does not require NTP, DNS or SMTP server addresses to be set to function correctly. A gateway address is only required if working with a router. If working in static address mode then you need to provide the IP address, the address mask and the gateway address.

The following menus are used by the PDT to configure the Ethernet port:

Figure 69 Ethernet menu items

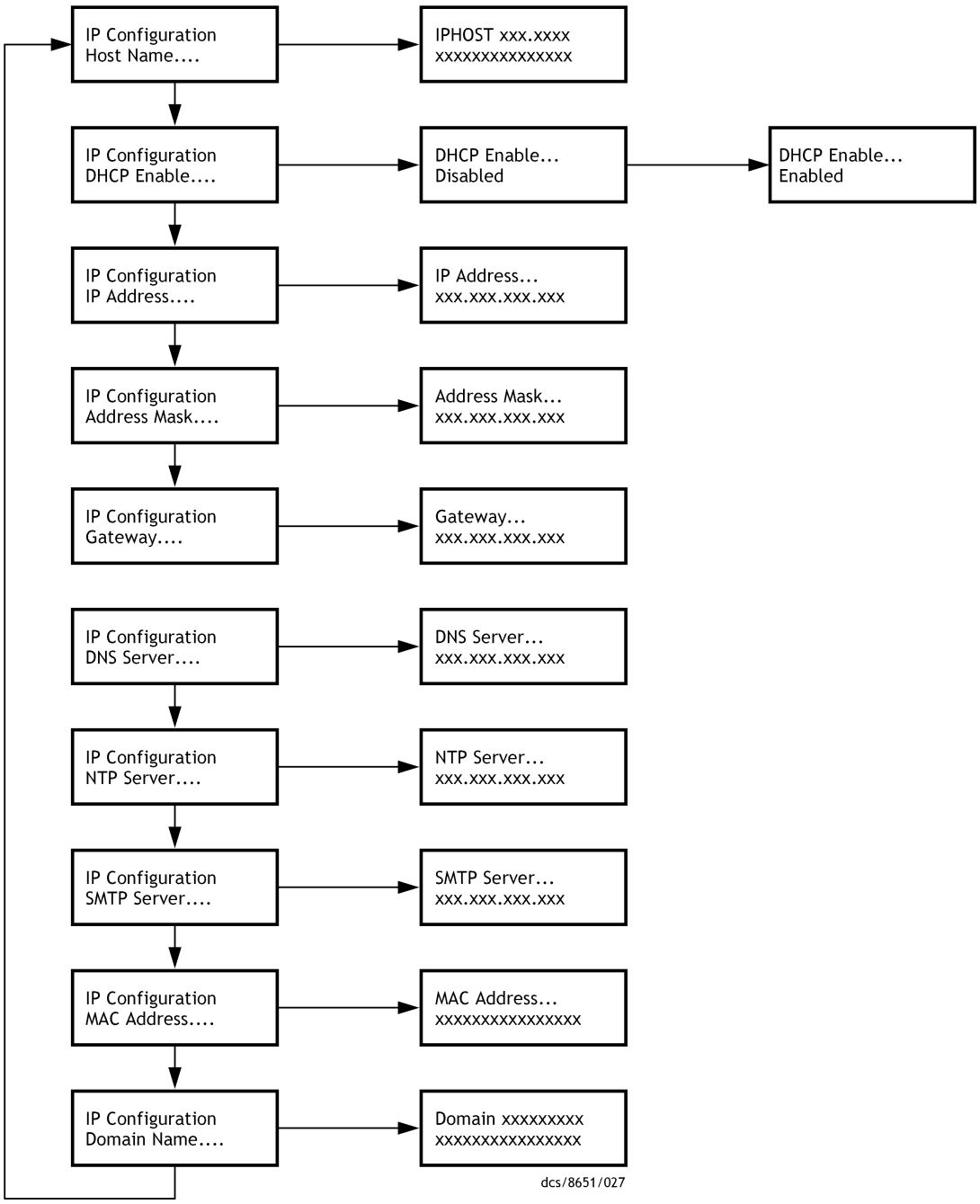

9.12.1 Using SIM protocol through Ethernet

The SIM Ethernet protocol is available on the following TCP/IP Ports.

Table 52 SIM protocol

SIM	TCP/IP Port
1	47591
2	47592

Use an Ethernet cable to connect to the Ethernet interface (*Figure: The controls/ connectors on the rear of the pump (system with rear exhaust and castors/levelling feet fitted)*, item 3) and then set the IP address of the system to the correct address.

Note:

If changing the IP address of a system or connecting/disconnecting an Ethernet cable, it may take several minutes before the system responds on its Ethernet port.

When the system is configured to use DHCP addressing the PDT can be used to read the pump's current IP address. The Setup menu to display this is shown below.

Figure 70 Setup menu items

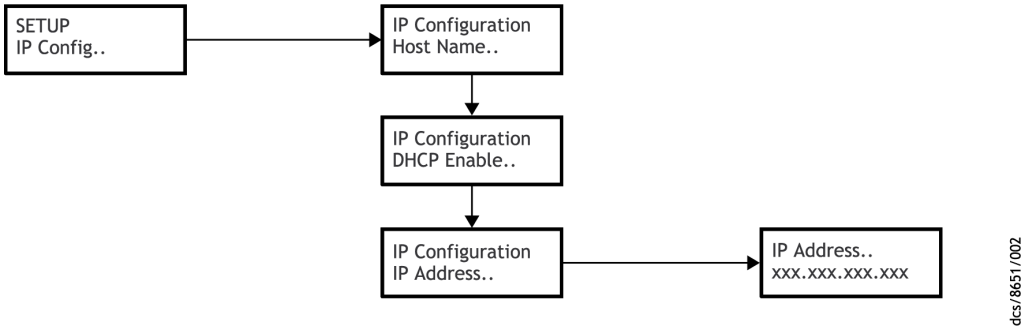

To check that the communication with the system is working, use the ping command from a command prompt on the computer. It is important that the system and the computer are able to route the signals to each other, for example, they should be on the same subnet. If in doubt contact the computer support department for advice.

Example of ping to a pump:

Figure 71 Ping to a pump screenshot

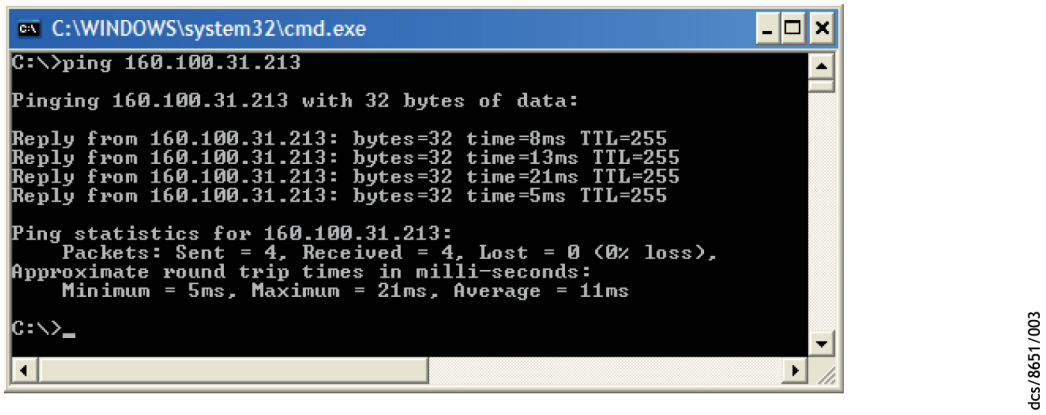

SIM protocol can be tested over Ethernet using HyperTerminal.

1. Start HyperTerminal.
2. Enter the IP address of the pump in the Host address field. In the Port number field enter the SIM port to be used, either 47591 or 47592. In the Connect using field, select TCP/IP (Winsock) as shown.

Figure 72 Connect to screenshot

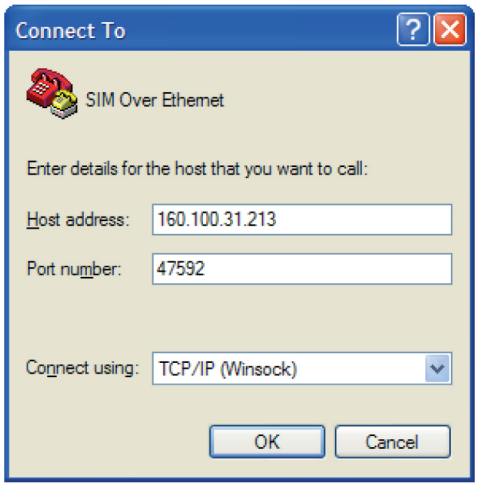

dcs/8651/008

3. Set the ASCII settings to the following from the File/Properties/Settings menu.

Figure 73 ASCII setup screenshot

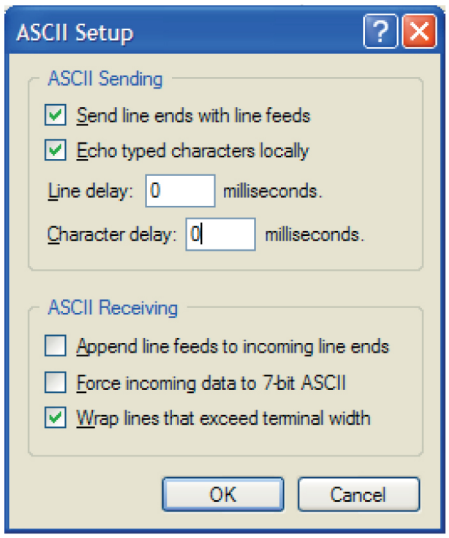

dcs/8651/010

4. In the HyperTerminal window, type: '?T' and press the ENTER key. If successful, the user should get a reply with the following format:

157,28,19,42,0,72,121,35,0

In this example:

157	indicates a pump controller
28	indicates a GXS pump family
19	indicates a GXS250
42	indicates a GXB2600 booster
0	indicates GXS screw pump
72	indicates low volts, 7.5 kW DP and 7.5 kW BP
121	indicates a harsh gas module
35	indicates a normal thermal management type
0	indicates a normal exhaust type

Refer to the SIM manual for more information about the various field elements and what they mean for the GXS.

9.13 How to use SIM protocol with a serial port

SIM protocol is used as a means of communication between our vacuum pumps and other external control and monitoring equipment. For more information about SIM protocol, refer to the SIM protocol manual P41100200.

To use SIM protocol by a serial port, connect the GXS to the computer as described in Connecting the GXS dry pumping system for serial communications *Connecting the dry pumping system for serial communications* on page 53. Start the program HyperTerminal on the computer and select the COM port to be used. Then configure the COM port to the following settings:

Table 53 COM port settings

COM port	Requirements
Bits per second	9600
Data bits	8
Parity	None
Stop bits	1
Flow control	None

Next, set the ASCII settings as follows:

Figure 74 ASCII settings screenshot

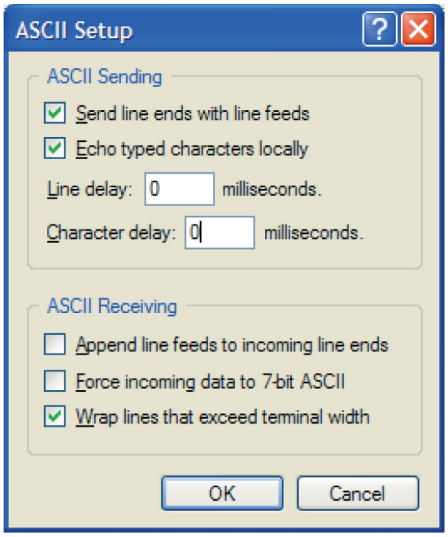

dcs/8651/009

In the HyperTerminal window, type: '?T' and press the ENTER key.

If successful, you should get a reply with the following format:

157,28,19,42,0,72,121,35,0

In this example:

157	indicates the pump controller
28	indicates the GXS pump family
19	indicates the GXS250
42	indicates the GXB2600 booster
0	indicates the GXS screw pump
72	indicates low volts, 7.5 kW DP and 7.5 kW BP
121	indicates a harsh gas module
35	indicates a normal thermal management type
0	indicates a normal exhaust type

Refer to the SIM manual for more information about the various field elements and what they mean for the system. Any other query and command can be sent by typing the operation and parameter followed by the ENTER key.

9.14 How to set up the MCM MicroTIM using the PDT

If the MCM MicroTIM is fitted to the system, all the pump configuration settings that are made using the PDT are automatically stored in the MicroTIM. This means that if a new system is fitted, for example, while servicing the existing system, there is no need to configure the new pump settings if the original MicroTIM is used.

The PDT can also be used to configure the channel 2 input and channel 4 output on the MCM MicroTIM itself. Refer to the MicroTIM instruction manual D37360880 for full information about MicroTIM installation and setup.

The following menus are used by the PDT to configure the MCM MicroTIM channel 2 input and channel 4 output.

Figure 75 MicroTIM options menu

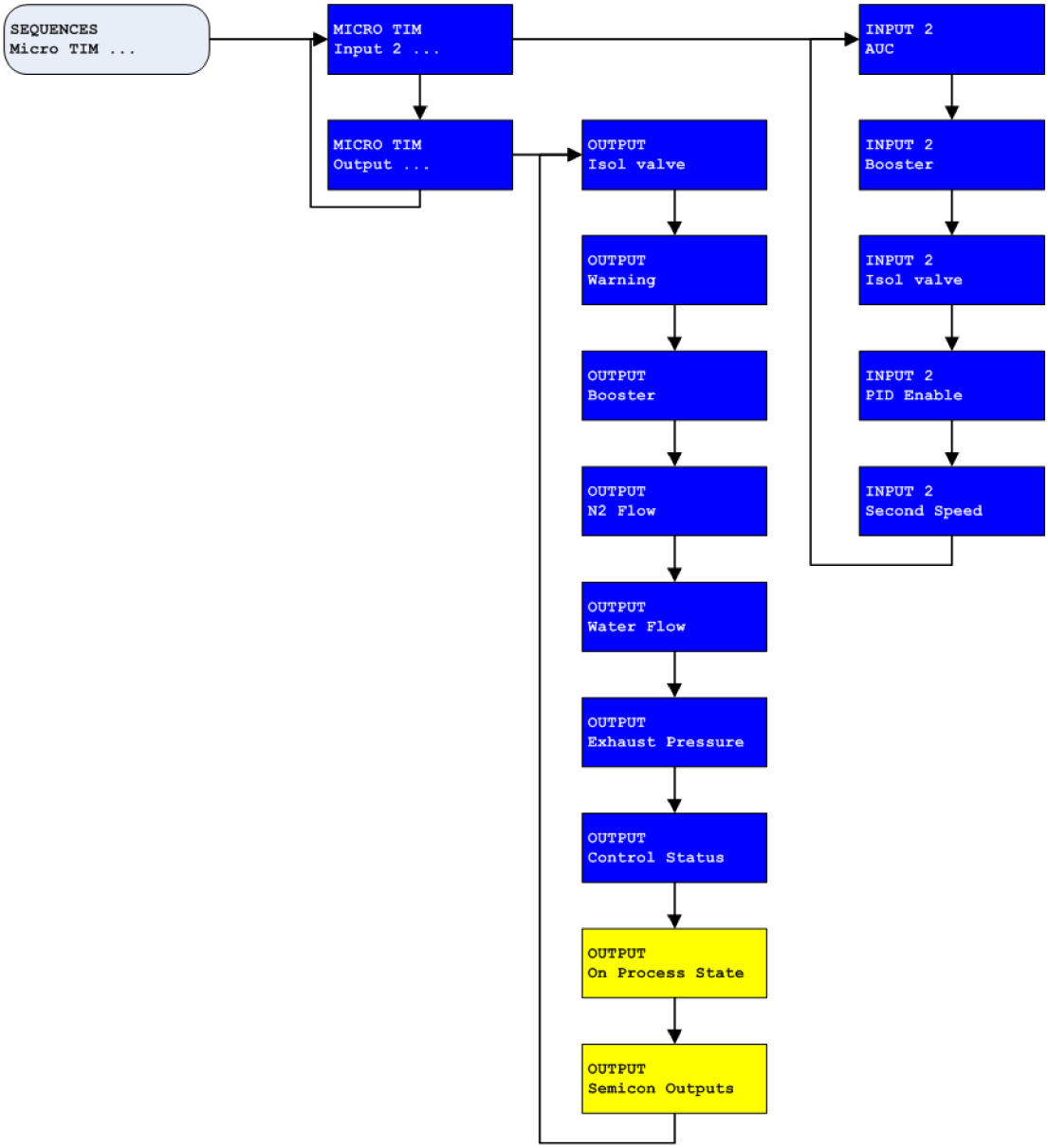

9.14.1 Configuring the channel 2 input

By default, the MCM MicroTIM channel 2 input is configured to control the green mode/ standby mode for the system but the user has the option of setting input 2 to turn the booster on/off, operate the inlet isolation valve, enable the PID or enable the second speed.

From the MicroTIM menu, select Input 2... and then scroll down the menu and press ENTER to select the input of choice.

Notes:

1. Only one input option can be active at a time.

2. If using channel 2 to control the booster, the booster will not start unless the dry pump is on. This input is ignored if the system does not have a booster.

3. The Second Speed input can be used to control the speed of either the dry pump or the booster, this can be set using the SPEED CONTROL menus. Refer to How to control the pump speed on page 144.

9.14.2 Configuring the channel 4 output

By default, the MCM MicroTIM channel 4 output is configured to show the status of the isolation valve (if fitted). The user has the option of configuring channel 4 to monitor the status of system warnings, booster, nitrogen flow, water flow, exhaust pressure and remote/local control.

From the MicroTIM menu, select Output 4... and then scroll down the menu and press ENTER to select the output of choice.

Notes:

1. Only one output option can be active at a time.

2. Booster status is only available for combination systems that contain a dry pump and booster.

3. Isolation valve, nitrogen flow and water flow monitoring kits are available as optional accessories and status can only be monitored if fitted.

9.15 How to run the booster independently from the dry pump

The booster can be set to run independently from the dry pump using the PDT. The booster can then be controlled using the PDT, the MCM MicroTIM, the SIM protocol or Profibus.

If controlling the booster from the PDT or by using SIM protocol or Profibus then the booster start mode needs to be changed to 'manual' using the PDT. Refer to *Setting the booster to manual operation* on page 137 for the instructions on setting the booster to manual mode. Once in manual mode, the booster will operate independently from the dry pump.

9.15.1 Run the booster manually using the PDT

To turn the booster on using the PDT, follow this procedure and refer to *Figure: Booster commands menu*:

1. From the SETUP menu, select Command Menu... (requires an access code: 202).
2. Scroll down and select MB...
3. Scroll down and select On.

Figure 76 Booster commands menu

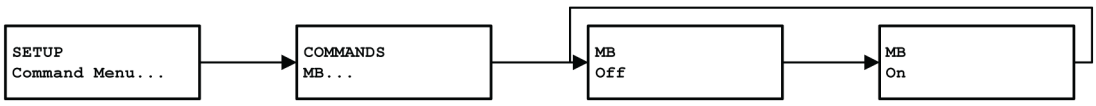

gea-figA42

9.15.2 Run the booster using SIM and Profibus

Refer to the SIM and Profibus manuals for information on how to control the booster using these protocols.

9.15.3 Run the booster using the MCM MicroTIM

If controlling the booster independently using the MCM MicroTIM then Input 2 needs to be configured to Booster. Refer to *How to set up the MCM MicroTIM using the PDT* on page 156 for the instructions on how to configure the MCM MicroTIM using the PDT. Once the Input 2 has been configured to Booster, Input 2 will start and stop the booster independently of the dry pump.

10. Fault finding

10.1 PDT events

There are some circumstances in which the system is unable to respond to a command that has been made. To help in understanding why an operation was not possible, the pump triggers an event and displays a message on the PDT (if fitted).

10.1.1 LED event indicators

When a new event is triggered, the warning LED on the PDT will flash. To acknowledge an event, press ENTER on the PDT. Once the event has been acknowledged the warning LED on the PDT will return to its previous state.

Note:

The events are only indicated by the PDT warning LED. The pump LEDs do not indicate events.

10.1.2 PDT event messages

When a new event is triggered an event message appears on the PDT. Refer to *Table: Events* for a list of event messages that might be displayed on the PDT with possible causes and actions that should be taken.

Once an event has been acknowledged, the event message clears from the PDT.

Table 54 Events

Event message on PDT	Possible cause
Event 11.41 on page 160	Cannot go on-process. The pump has an active warning.
Event 11.42 on page 161	Warming up the pump before going on-process.
Event 11.45 on page 161	Cannot go on-process. The pump has an active interlock.
Event 317.43 on page 161	Can not start Command. The pump is not in the green mode.
Event 317.46 on page 161	Cannot start Command. The pump is not running.
Event 317.47 on page 161	Cannot start Command. Already running on the pump.
Event 322.22 on page 161	Cannot start Command. The pump is not stopped.
Event 331.42 on page 162	Cannot start Command. The pump is not warmed up.
Event 331.43 on page 162	Cannot start Command. The pump is not in the green mode.
Event 331.46 on page 162	Cannot start Command. The pump is not running.

Fault	Event 11.41
	Cannot go on-process. The pump has an active warning.
Cause	**The pump has an active warning.**
Remedy	Either clear the source of the warning or enable the pump to go on-process with a warning (refer to *Allow a pump to go on-process with a warning* on page 137).

Fault	Event 11.42
	Warming up the pump before going on-process.
Cause	**The pump is not warm enough to go on-process immediately.**
Remedy	Either reduce the warm up temperature (refer to *Lowering the warm-up temperature* on page 136), enable the pump on-process when cold (refer to *Disabling the warm-up cycle* on page 136) or wait for the pump to go on-process when it has warmed up.

Fault	Event 11.45
	Cannot go on-process. The pump has an active interlock.
Cause	**The pump is running a DP Clean sequence which has not completed.**
Remedy	- Either wait for the DP clean to complete or manually turn it off (refer to *Dry pump clean* on page 63). - If using the solvent flush we recommend that the pump is allowed to complete the purge cycle. - If the DP clean has been configured to run a purge cycle after the clean cycle then it needs to be sent two 'off' commands (refer to *Solvent flush* on page 64).

Fault	Event 317.43
	Cannot start command. The pump is not in the green mode.
Cause	**The pump must be in the green mode/standby mode to initiate the PID auto tune.**
Remedy	Set the pump into the green mode/standby mode and then start the PID auto tune.

Fault	Event 317.46
	Cannot start command. the pump is not running.
Cause	**The pump must be running to initiate the PID auto tune.**
Remedy	Start the pump, set it into green mode/standby mode and then start the PID auto tune.

Fault	Event 317.47
	Cannot start command. Already running on the pump.
Cause	**The pump is already running the PID auto tune.**
Remedy	Either let the auto tune complete or stop it before sending the PID auto tune command again.

Fault	Event 322.22
	Cannot start command. The pump is not stopped.

Cause	**The pump must be stopped before starting the solvent soak.**
Remedy	Stop the pump and then repeat the command.

Fault	**Event 331.42**

Cannot start Command. The pump is not warmed up.

Cause	**The pump must be warmed up and in the green mode/standby mode to initiate the DP Clean sequence.**
Remedy	- Either reduce the warm up temperature (refer to *Lowering the warm-up temperature* on page 136), enable the pump on-process when cold (refer to *Disabling the warm-up cycle* on page 136) or wait for the pump to warm up. - Make sure that the pump is in green mode/standby mode before attempting the DP Clean.

Fault	**Event 331.43**

Cannot start Command. the pump is not in the green mode.

Cause	**The pump must be in the green mode/standby mode to initiate the DP Clean sequence.**
Remedy	Set the pump into green mode/standby mode and then start the DP clean.

Fault	**Event 331.46**

Cannot start command. The pump is not running.

Cause	**The pump must be running to initiate the DP Clean sequence.**
Remedy	-

10.2 Warnings

The pump controller generates a warning when a problem is encountered.

By default, the pump is prevented from going on-process when there are active warnings so it is important to investigate the cause of the warning. It is possible to configure the pump so that it will go on-process with the active warnings. Refer to *Allow a pump to go on-process with a warning* on page 137 for more information.

Once the problem that caused a warning has been resolved, the warning is cleared by the pump controller.

10.2.1 LED warning indicators

If the pump encounters a problem, warnings are indicated on the LEDs on the front control panel, the rear panel and on the PDT if fitted.

The warning LEDs on the front control panel and rear panel illuminate continuously when a warning is generated.

If a PDT is fitted, the warning LED flashes to indicate a new warning. Refer to *Event/warning/alarm display and acknowledgement* on page 121 for more information on how warnings are indicated and how they can be acknowledged using the PDT.

Once all the warnings are cleared, the warning LEDs extinguish.

10.2.2 PDT warnings

If a PDT is fitted, each warning triggers a warning message to be displayed. Refer to *Event/warning/alarm display and acknowledgement* on page 121 for more information on how the warnings are handled by the PDT.

lists the warning messages that might be displayed on the PDT with possible causes and actions that should be taken.

Table 55 Warnings

Warning message on PDT	Action message on PDT
Warning 1.01 - Power interrupt on page 163	Check pwr supply
Warning 34.01 - N2 purge low on page 164	N_2 purge low Check N_2 supply
Warning 39.11 - Exh Press High on page 164	Exhaust Blocked Service Pump
Warning 39.13 - Sensor missing on page 164	-
Warning 51.13 - Sup Missing on page 164	See manual
Warning 54.11 - MB Temp High on page 164	See manual
Warning 54.13 - Sensor missing on page 164	-
Warning 55.11/ Warning 63.11-DP Temp High on page 164	See manual
Warning 55.13/ Warning 63.13-Sensor missing on page 165	-
Warning 71.13 - AC Sup missing on page 165	See manual
Warning 152.01 - Valve Not Shut on page 165	Check ISOL Valve
Warning 153.01 - Valve Not Open on page 165	Check ISOL Valve
Warning 176.01 - MB INV xxxx yyyy on page 165	xxxx yyyy aaaaaaaaaaaaaaaa
Warning 176.13 - No MB Inv Comms on page 165	See manual
Warning 186.01 - DP INV xxxx yyyy on page 165	xxxx yyyy aaaaaaaaaaaaaaaa
Warning 186.13 - No DP Inv Comms on page 166	See manual
Warning 196.01 - DP Inv xxxx yyyy on page 166	Diag aaaa bbbb/zzzzzzzzzzzzzzz
Warning 196.13 - No DP Inv Comms on page 166	See manual
Warning 314.11 - DP Speed Too Low on page 166	Stop Pump/Contact Service

Fault	Warning 1.01 - Power interrupt
Cause	**There has been a brownout of the electrical supply to the pump lasting more than 1 second.**
Remedy	Check the electrical supply.

Fault	Warning 34.01 - N2 purge low
Cause	**Low N_2 pressure. If the flow switch is fitted, low N_2 flow.**
Remedy	Check N_2 supply and increase the pressure. If the N_2 flow switch is fitted, check the flow and increase the flow.

Fault	Warning 39.11 - Exh Press High
Cause	**The pressure in the exhaust pipeline is too high.** **- A valve in the pipeline may be shut.** **- There may be process debris or condensation in the exhaust pipeline.** **- You may have too many pumping systems connected to the exhaust pipeline.**
Remedy	Refer to *Unplanned shut down and alarms* on page 61 to determine the exhaust pressure that triggered the warning. Check that all valves in the exhaust line are open and consider whether process debris or condensation are likely.

Fault	Warning 39.13 - Sensor missing
Cause	**The exhaust pressure transducer is not fitted, disconnected or has failed.**
Remedy	Check and rectify as necessary.

Fault	Warning 51.13 - Sup Missing
Cause	**There is a communication problem within the pump controller. Refer to *Pump controller communications* on page 173 for more information.**
Remedy	Cycle the power to the pump. If the warning persists, contact us to replace the pump controller.

Fault	Warning 54.11 - MB Temp High
Cause	**The temperature of the booster pump is too high.**
Remedy	Check that the cooling water is connected, switched on and is to the specification given in Cooling water data.

Fault	Warning 54.13 - Sensor missing
Cause	**The booster temperature sensor may have become disconnected or failed.**
Remedy	- Check that the booster pump temperature sensor is fitted and is correctly connected. - Check the operation of the sensor and replace it if it has failed.

Fault	Warning 55.11/ Warning 63.11-DP Temp High
Cause	**The internal temperature of the pump is too high.**

Remedy	Check that cooling water is connected, switched on and is to the specification given in *Cooling-water data* on page 25.

Fault	Warning 55.13/ Warning 63.13-Sensor missing
Cause	**The dry pump temperature sensor may have become disconnected or failed.**
Remedy	- Check that the sensor is fitted and is correctly connected. - Check the operation of the sensor and replace it if it has failed.

Fault	Warning 71.13 - AC Sup missing
Cause	**The pump controller cannot communicate with the accessory module.**
Remedy	- Check that the accessory module is correctly connected to the pump and then cycle the power to the pump. - If this warning persists, contact us.

Fault	Warning 152.01 - Valve Not Shut
Cause	**The inlet isolation valve has failed to close.**
Remedy	Check the wiring and the air supply to the inlet isolation valve.*

** This warning will only clear when the valve has successfully been closed and opened.*

Fault	Warning 153.01 - Valve Not Open
Cause	**The inlet isolation valve has failed to open.**
Remedy	Check the wiring and the air supply to the inlet isolation valve.*

** This warning will only clear when the valve has successfully been closed and opened.*

Fault	Warning 176.01 - MB INV xxxx yyyy
Cause	**Booster Inverter has raised a warning code.**
Remedy	Refer to *Inverter warnings and alarms* on page 170 for more information.

Fault	Warning 176.13 - No MB Inv Comms
Cause	**The pump controller cannot communicate with the booster inverter.**
Remedy	Check the wiring between the pump controller and the booster inverter.

Fault	Warning 186.01 - DP INV xxxx yyyy
Cause	**Dry pump Inverter has raised a warning code.**
Remedy	Refer to *Inverter warnings and alarms* on page 170 for more information.

Fault	Warning 186.13 - No DP Inv Comms
Cause	**The pump controller cannot communicate with the dry pump inverter.**
Remedy	Check the wiring between the pump controller and the dry pump inverter.

Fault	Warning 196.01 - DP Inv xxxx yyyy
Cause	**DP 2nd Inverter has raised a warning code.**
Remedy	Refer to *Inverter warnings and alarms* on page 170 for more information.

Fault	Warning 196.13 - No DP Inv Comms
Cause	**The pump controller cannot communicate with the dry pump 2nd inverter.**
Remedy	Check the wiring between the pump controller and the dry pump inverter.

Fault	Warning 314.11 - DP Speed Too Low
Cause	**The pump is running more slowly than the speed that is demanded.**
Remedy	Stop the pump and perform a mechanical check of rotation and the bearings.

10.3 Alarms

The pump controller generates an alarm when a serious problem is encountered.

Depending on the reason for the alarm, the whole system or just the booster (if fitted) will shut down. Refer to *Automatic shut down* on page 61 and *Unplanned shut down and alarms* on page 61 for more information about the alarms.

If the system has shut down due to an alarm, the problem must be rectified before attempting to restart the pump.

Once the problem that caused the alarm has been resolved, the alarm is cleared by the pump controller.

10.3.1 LED alarm indicators

Alarms are indicated on the LEDs on the front control panel, the rear panel and on the PDT if fitted.

The alarm LEDs on the front control panel and rear panel illuminate continuously when an alarm is generated.

If a PDT is fitted, the alarm LED flashes to indicate a new alarm. Refer to *Event/warning/alarm display and acknowledgement* on page 121 for more information on how the alarms are indicated and how they can be acknowledged using the PDT.

Once all the alarms are cleared, the alarm LEDs extinguish.

10.3.2 PDT alarms

If a PDT is fitted, each alarm triggers an alarm message to be displayed. Refer to *Event/warning/alarm display and acknowledgement* on page 121 for more information on how alarms are handled by the PDT.

lists the alarm messages that might be displayed on the PDT with possible causes and actions that should be taken.

Table 56 Alarms

Warning message on PDT	Action message on PDT
Alarm 1.01 - Stop Activated on page 167	-
Alarm 1.01 - Sys Config Fault on page 167	-
Alarm 39.12 - Exh Press High on page 168	Exhaust Blocked Service Pump
Alarm 54.12 - MB Temp High on page 168	See manual
Alarm 55.12 / Alarm 63.12 - DP Temp High on page 168	See manual
Alarm 174.10 - Booster Stopped on page 168	See manual
Alarm 176.01 - MB INV xxxx yyyy on page 168	xxxx yyyy aaaaaaaaaaaaaaaa
Alarm 176.01 - MB Not Running on page 168	See manual
Alarm 176.13 - No MB Inv Comms on page 169	See manual
Alarm 184.10 - Dry Pump Stopped on page 169	See manual
Alarm 186.01 - DP INV xxxx yyyy on page 169	xxxx yyyy aaaaaaaaaaaaaaaa
Alarm 186.01 - DP Not Running on page 169	See manual
Alarm 186.13 - No DP Inv Comms on page 169	See manual
Alarm 196.01 - DP Inv xxxx yyyy on page 169	Diag aaaa bbbb/zzzzzzzzzzzzzzz
Alarm 196.13 - No DP Inv Comms on page 169	See manual
Alarm 314.12 - Speed Too Low on page 169	Do not Restart/Contact Service

Fault	Alarm 1.01 - Stop Activated
Cause	**The emergency stop has been activated.** **There is a fault with the EMS circuit or the EMS link plug has not been fitted or has become disconnected.**
Remedy	If the EMS button has been used on the pump, refer to *Restart the pump after an emergency stop or automatic shut down* on page 62 to reset it. Otherwise check and reset the EMS circuit and restart the pump. The alarm message will remain on the display until the dry pumping system is restarted.

Fault	Alarm 1.01 - Sys Config Fault
Cause	**The pump system type has not been set properly.**

Remedy	Contact us for a service engineer to configure the pump system type correctly or replace the pump controller electronics.

Fault	Alarm 39.12 - Exh Press High
	Action message - Exhaust Blocked, Service Pump
Cause	**The exhaust pressure has reached the maximum allowed.**
Remedy	Refer to *Unplanned shut down and alarms* on page 61 to determine the exhaust pressure that triggered the alarm. Refer to *Warning 39.11 - Exh Press High* on page 164 for the causes and actions.

Fault	Alarm 54.12 - MB Temp High
	Action message - See manual
Cause	**The booster temperature has reached the maximum allowed so the booster has stopped.**
Remedy	Refer to *Unplanned shut down and alarms* on page 61 to determine the temperature that triggered the alarm. Refer to *Warning 54.11 - MB Temp High* on page 164 for the causes and actions.

Fault	Alarm 55.12 / Alarm 63.12 - DP Temp High
Cause	**The dry pump internal temperature has reached the maximum allowed so the dry pumping system has stopped.**
Remedy	Refer to *Warning 55.11/ Warning 63.11-DP Temp High* on page 164 for the causes and actions.

Fault	Alarm 174.10 - Booster Stopped
Cause	**The booster speed is too low - the rotor is probably locked.**
Remedy	Contact us.

Fault	Alarm 176.01 - MB INV xxxx yyyy
Cause	**The booster inverter has raised an alarm and stopped the dry pumping system.**
Remedy	Refer to *Inverter warnings and alarms* on page 170 for more information.

Fault	Alarm 176.01 - MB Not Running
Cause	**The booster inverter will not start-up when requested.**
Remedy	Check the inverter fault history.

Fault	Alarm 176.13 - No MB Inv Comms
Cause	**The pump controller cannot communicate with the booster inverter during the start-up checks.**
Remedy	Check the wiring between the pump controller and the booster inverter.

Fault	Alarm 184.10 - Dry Pump Stopped
Cause	**The dry pump speed is very low. The rotor might be locked.**
Remedy	Cycle the power to the pump and attempt to restart. If this fails, contact us.

Fault	Alarm 186.01 - DP INV xxxx yyyy
Cause	**The dry pump inverter has raised an alarm and stopped the dry pumping system.**
Remedy	Refer to *Inverter warnings and alarms* on page 170 for more information.

Fault	Alarm 186.01 - DP Not Running
Cause	**The dry pump inverter will not start up when requested.**
Remedy	Check the inverter fault history.

Fault	Alarm 186.13 - No DP Inv Comms
Cause	**The pump controller cannot communicate with the dry pump inverter during start-up checks.**
Remedy	Check the wiring between the pump controller and the dry pump inverter.

Fault	Alarm 196.01 - DP Inv xxxx yyyy
Cause	**The DP 2nd dry pump inverter has raised an alarm and stopped the dry pumping system.**
Remedy	Refer to *Inverter warnings and alarms* on page 170 for more information.

Fault	Alarm 196.13 - No DP Inv Comms
Cause	**The pump controller cannot communicate with the dry pump 2nd inverter.**
Remedy	Check the wiring between the pump controller and the dry pump inverter.

Fault	Alarm 314.12 - Speed Too Low
Cause	**The pump rotational speed is at least 30% less than demand for more than 3 minutes.**
Remedy	Perform a mechanical check of rotation and the bearings before attempting to restart.

10.4 Inverter warnings and alarms

The inverters used to drive the dry pump and the booster can also generate warnings and alarms if problems are encountered. The inverter warning and alarm codes are displayed by the PDT (if fitted).

The alarm and warning codes are each reported as a 16-bit word encoded as 4 hexadecimal numbers. The codes are displayed as follows:

1234 5678

Where:

- the first 4 digits signify an alarm code
- the second 4 digits signify a warning code.

Digits 1-8 are reported as the hexadecimal digits from 0 to F.

To determine the cause of a warning or alarm you must first decode each hexadecimal number. 0 indicates that there is no alert for that bit. Normally you will only see the codes of 1, 2, 4 or 8 for each bit but if two or more events occur in the same bit then these will be added together.

For example:

5 = 1 + 4 so if code 5 is displayed it means that alerts 1 and 4 are active

B = 1 + 2 + 8 so if code B is displayed it means that alerts 1, 2 and 8 are active.

To decode the inverter warning and alarm codes, refer to *Table: Hexadecimal to digital conversion* to convert the hexadecimal digits into the alert combinations and then refer to *Table: Inverter alarm codes* and *Table: Inverter warning codes*).

Table 57 Hexadecimal to digital conversion - Bit set combinations

Hexadecimal	Decimal	Combination
F	15	8+4+2+1
E	14	8+4+2
D	13	8+4+1
C	12	8+4
B	11	8+2+1
A	10	8+2
9	9	8+1
8	8	8
7	7	4+2+1
6	6	4+2
5	5	4+1
4	4	4
3	3	2+1
2	2	2
1	1	1

Table 58 Inverter alarm codes

Inverter alarms			
Bit set	**Fault code combination**	**PDT reported fault name**	**Description**
1	8	ACCELERATION_TO	If the motor has not accelerated to a minimum speed of 10 Hz within 60 seconds then the drive will try to restart three times before giving alarm
	4	OVERLOAD_TO	Alarm given when the dry pump speed is below 7 Hz for 3 minutes or 30 minutes for a booster.
	2	SC_MODE_INTERLOCK	Internal fault, contact us.
	1	FLASH_DOWNLOAD_ FAULT	Internal fault, contact us.
2	8	POST_FAULT	Internal fault, contact us.
	4	OSTEST _FAULT	Internal fault, contact us.
	2	EEPROM_FAULT	Internal fault, contact us.
	1	PWM_TRIP	Inverter output switched off - active when the drive is not running. Restart the pump or cycle the power to reset.
3	8	MISSING_PHASE_ TIMEOUT	Indicates a missing input phase. Check power connections to the pump and fuses in supply. Warning should appear first and then the dry pump trips after 10 minutes and the booster trips after 30 minutes.
	4	EMS	EMS has been activated. Check EMS button at the front and EMS plug in the back of pump controller.
	2	DESAT_FAULT	Internal fault, contact us.
	1	UNDERT	Inverter is too cold. See warning register to determine the source of problem.
4	8	OVERT	Motor/drive system over temperature. Refer to warning code to determine source. Check cooling.
	4	OVERI	Motor overcurrent
	2	OVERV	Inverter overvoltage
	1	Reserved	Reserved

Table 59 Inverter warning codes

Inverter alarms			
Bit set	**Fault code combination**	**PDT reported fault name**	**Description**
5	8	Reserved	Reserved
	4	Reserved	Reserved
	2	LOWTW	Condensation warning, indicates that the inverter (water) temperature is lower than expected - possible causes include inverter water valve stuck open.
	1	HIGHTW	Indicates that the inverter temperature is higher than expected - possible causes include no or low cooling water flow, inverter water valve stuck closed or water pipe to inverter is blocked.
6	8	HIGHTC	Controller temperature above the upper limit/controller temperature sensor open circuit. Check water supply.
	4	HIGHTS	Inverter heat-sink temperature above the upper limit/inverter heat-sink temperature sensor open circuit. Check water supply.
	2	HIGHTM	Motor temperature above upper limit/motor temperature sensor open circuit. Check water supply.
	1	MISSING_PHASE	The loss of one of the three input phases has been detected. Check the mains supply to the drive or blown fuses.
7	8	UTCREG	The upper controller temperature regulator active - current limit reduced. Check cooling.
	4	UTSREG	Upper heat sink temperature regulator is active - current limit reduced. Check the cooling.
	2	Reserved	Reserved
	1	LVREG	Lower voltage regulator active. Check the mains voltage.
8	8	LOWVCC	Internal power supply fault. Contact us.
	4	LOWTC	Low controller temperature. Contact us.
	2	LOWTS	Low heatsink temperature. Contact us.
	1	CAN LOSS	Reserved

Example:

PDT shows the following:
0108 0200

This translates to:

alarm 1 in bit 2 - PWM_TRIP

alarm 8 in bit 4 - OVERT

warning 2 in bit 6 - HIGHTM.

This means the motor is overheated and switched the output off.

10.5 Other problems

10.5.1 Pump controller communications

The pump controller contains two processors that perform different functions. Under normal operation, the two processors communicate with each other internally while they perform their functions.

Under fault conditions, it is possible that the two processors stop communicating with each other. In this circumstance:

- The pump may continue to run normally, with gas valves and gate valves kept in the same state.
- Depending which device is 'in control' of the system, control might be released (for example PDT).
- The front panel controls can be used to 'take control' and stop the pump but this will only be a simple stop, it will not be possible to use any of the shutdown sequences such as Smart Stop.
- If the front panel controls or the EMS button are used to stop the pump, the warning LEDs on the pump will flash and the alarm LED will illuminate. The inlet isolation valve will shut.
- Stop requests from all the devices apart from the front panel controls will be ignored.
- Any requests to start the pump will be rejected.

For systems fitted with the MCM MicroTIM:

- If the pump is stopped when communication is lost then 'alarm present' is set on the alarm line.
- If the pump is running when communication is lost then the outputs to the MicroTIM are unaffected.

This page has been intentionally left blank.

This page has been intentionally left blank.